Article:
Ni, P, Fragkoulis, VC, Kong, F et al. (2 more authors) (2021) Response Determination of Nonlinear Systems with Singular Matrices Subject to Combined Stochastic and Deterministic Excitations. ASCE-ASME Journal of Risk and Uncertainty in Engineering Systems, Part A: Civil Engineering, 7 (4). 04021049. 04021049-04021049. ISSN 2376-7642

https://doi.org/10.1061/ajrua6.0001167

Response Determination of Nonlinear Systems with Singular Matrices Subject to Combined Stochastic and Deterministic Excitations

Peihua Ni[a], Vasileios C. Fragkoulis *[a], Fan Kong[b], Ioannis P. Mitseas[c], and Michael Beer[a,d,e]

[a]*Institute for Risk and Reliability, Leibniz University Hannover, Germany, E-mail: peihua.ni@irz.uni-hannover.de, fragkoulis@irz.uni-hannover.de, beer@irz.uni-hannover.de.*

[b] *School of Civil Engineering and Architecture, Wuhan University of Technology, China, E-mail: kongfan@whut.edu.cn.*

[c] *School of Civil Engineering, University of Leeds, UK, E-mail: I.Mitseas@leeds.ac.uk.*

[d]*Institute of Risk and Uncertainty, University of Liverpool, UK.*

[e]*International Joint Research Center for Engineering Reliability and Stochastic Mechanics, Tongji University, China.*

Abstract

A new technique is proposed for determining the response of multi-degree-of-freedom nonlinear systems with singular parameter matrices subject to combined stochastic and deterministic excitations. Singular matrices in the governing equations of motion potentially account for the presence of constraint equations in the system. Further, they also appear when a redundant coordinates modeling is adopted to derive the equations of motion of complex multi-body systems. In this regard, considering that the system is subject to both stochastic and deterministic excitations, its response also has two components, namely a deterministic and a stochastic one. Therefore, employing first the harmonic balance method to treat the deterministic component leads to an overdetermined system of equations, to be solved

*Corresponding author: fragkoulis@irz.uni-hannover.de

for computing the associated coefficients. Then, the generalized statistical linearization method for deriving the stochastic response of nonlinear systems with singular matrices, in conjunction with an averaging treatment, are utilized to determine the stochastic component of the response. The validity of the proposed technique is demonstrated by pertinent numerical examples.

1 Introduction

Utilizing the minimum number of independent generalized coordinates constitutes the commonly followed practice for modeling the equations of motion of multi-degree-of-freedom (MDOF) dynamical systems (e.g., Roberts and Spanos [2003]; Li and Chen [2009]). Clearly, this is due to the symmetric and positive definite system parameter matrices appearing in the governing equations of motion. These facilitate the development of efficient stochastic response determination techniques, such as these based on the Wiener path integral (e.g., Petromichelakis and Kougioumtzoglou [2020]), but also on recently developed efficacious sparse representations of the stochastic system response based on compressive sampling concepts and tools (e.g., Kougioumtzoglou et al. [2020]). However, also taking into account the effort involved in the modeling procedure, it can be argued that modeling based on the minimum number of coordinates can be a rather daunting task. This especially applies for classes of complex multi-body systems and/or systems subject to constraints Udwadia and Kalaba [1992, 2001]. In particular, depending on the number of bodies which constitute the system under consideration, on the topology and nature of their connections (e.g., linear, nonlinear, hysteretic), as well as on the presence of constraint equations, utilizing the minimum number of coordinates/degrees-of-freedom (DOFs) can even become impractical. Moreover, it can be argued that following the standard minimum number of DOFs-based formulation of the equations of motion in multi-body system modeling (instead of adopting a redundant DOFs one), apart from providing the modeler with limited flexibility, it also relates to solution frameworks of increased computational cost; see, indicatively, Udwadia and Phohomsiri [2006]; Critchley and Anderson [2003]; Featherstone [1984]; Schutte and Udwadia [2011]; de Falco et al. [2005]; Pappalardo and Guida [2018a]; Pappalardo and Guida [2018b]; Udwadia and Wanichanon [2013]; Pirrotta et al. [2019] for a more detailed discussion. Further, it is worth noting that the degree of simplicity and the amount of effort required for deriving the equations of motion are critical for assessing the performance of an applied solution framework.

In this regard, an alternative approach has been developed for bypassing some of the previous limitations, where the formulation of the governing equations of motion relies on adopting additional dependent coordinates/DOFs (e.g., Udwadia and Kalaba [2001]; Udwadia and Phohomsiri [2006]; Schutte and Udwadia [2011]). However, due to the dependence among the utilized DOFs, singular matrices appear in the system equations of motion, rendering all standard system analyses inapplicable. Therefore, it is necessary to develop new tools and techniques for studying the behavior and assessing the reliability of engineering systems with singular parameter matrices in the governing equations of motion. The first steps towards this direction have been recently made by resorting to the theory of generalized matrix inverses. In particular, the Moore-Penrose (M-P) matrix inverses theory has been invoked to extend standard time- and frequency-domain approaches of random vibration theory to account for linear and nonlinear systems with singular matrices (Fragkoulis et al. [2016a]; Fragkoulis et al. [2016b]; Kougioumtzoglou et al. [2017]; Pasparakis et al. [2021]; Pirrotta et al. [2021]); see also Refs. Fragkoulis et al. [2015]; Pantelous and Pirrotta [2017]; Pirrotta et al. [2019] for additional applications based on an M-P matrix inverses framework.

The machinery of the M-P matrix inverses-based solution framework is further enhanced in this paper by introducing a technique for determining the response of MDOF nonlinear systems with singular parameter matrices subject to combined stochastic and deterministic excitations. This is a rather substantial extension with applications, for instance, in the response determination of slender structures (e.g., wind turbines, submission towers, etc.), which are often subject to stochastic wind loading as well as deterministic loading due to vortex-shedding (Davenport [1995]; Tessari et al. [2017]). In such cases, depending on the complexity of the system under consideration, adopting the herein proposed multi-body system modeling approach potentially facilitates the derivation of its dynamics, and subsequently, of the system response determination. Further, the proposed approach can be used in vibration energy harvesting applications. Specifically, it can be used in applications related to contemporary vibration energy harvesters (VEHS) designed to operate in tandem with larger structures, such as bridges vibrating due to wind loads and harmonic loads caused by vehicles (Cai and Harne [2020]). In particular, when the problem of combined VEHs is considered for maximizing the energy production (e.g., Lee et al. [2019]), a redundant DOFs modeling can be employed to facilitate the derivation of the system dynamics.

The herein proposed technique can be construed as a generalization of a recently developed framework for deriving the response of MDOF nonlinear systems subject to combined stochastic and deterministic excitations (Spanos et al. [2019])

to account for systems with singular parameter matrices. In this regard, the harmonic balance method (e.g., Mickens [2010]; Krack and Gross [2019]) and the recently derived statistical linearization methodology for systems with singular matrices (Fragkoulis et al. [2016b]; Kougioumtzoglou et al. [2017]) are invoked to determine the response of systems exhibiting singular matrices, and subject to combined stochastic and deterministic excitation. Specifically, considering the form of the excitation, first, it is assumed that the corresponding system response is composed of a deterministic and a stochastic part. Next, the harmonic balance method is employed to treat the deterministic response. However, in contrast to the standard implementation of the method (i.e., Spanos et al. [2019]), an overdetermined system of equations (e.g., Lindfield and Penny [2018]) is constructed, to be solved for computing the harmonic coefficients of the method. Therefore, a novel M-P matrix inverses-based theoretical framework is introduced to solve the system, and thus, to determine the associated harmonic coefficients (e.g., Ben-Israel and Greville [2003]; Campbell and Meyer [2009]). Then, the generalized statistical linearization methodology for systems with singular matrices in conjunction with an averaging treatment are employed for treating the stochastic component of the response. It is noted that the combination of the two methods (i.e., of the harmonic balance and the statistical linearization) leads to a coupled system of algebraic equations, which is solved iteratively and both the stochastic and the deterministic response components are derived. Two numerical examples are used to demonstrate the validity of the proposed technique. Specifically, systems with mass, damping as well as stiffness nonlinearities of several magnitudes are considered. The obtained results are compared and found in complete agreement with corresponding results derived by applying the standard approach in Spanos et al. [2019].

2 Mathematical formulation

2.1 Nonlinear multi-degree-of-freedom Systems with Singular Parameter Matrices

The matrix form of the equations of motion of an l-DOF nonlinear system, where $\mathbf{x}$ denotes an l-dimensional dependent coordinates vector is given by

$$\mathbf{M_x}\ddot{\mathbf{x}} + \mathbf{C_x}\dot{\mathbf{x}} + \mathbf{K_x}\mathbf{x} + \mathbf{\Phi_x}(\mathbf{x}, \dot{\mathbf{x}}, \ddot{\mathbf{x}}) = \mathbf{Q_x}(t), \tag{1}$$

where $\mathbf{M_x}$, $\mathbf{C_x}$ and $\mathbf{K_x}$ correspond to the $l \times l$ mass, damping and stiffness matrices of the system. Further, $\mathbf{\Phi_x}(\mathbf{x}, \dot{\mathbf{x}}, \ddot{\mathbf{x}})$ denotes the l-dimensional vector of the system nonlinearities, which depends on the displacement $\mathbf{x}$ and its first and second derivatives. Finally, $\mathbf{Q_x}(t)$ represents a zero-mean Gaussian stochastic excitation. Next, it is considered that the system of Eq. (1) is subject to additional constraints of the form (Schutte and Udwadia [2011]; Fragkoulis et al. [2016a])

$$\mathbf{A}(\mathbf{x}, \dot{\mathbf{x}}, t)\ddot{\mathbf{x}} = \mathbf{b}(\mathbf{x}, \dot{\mathbf{x}}, t), \tag{2}$$

which, for simplicity, are expressed as $\mathbf{A}\ddot{\mathbf{x}} + \mathbf{E}\dot{\mathbf{x}} + \mathbf{L}\mathbf{x} = \mathbf{F}$, with $\mathbf{A}, \mathbf{E}, \mathbf{L}$ and $\mathbf{F}$ denoting, respectively, $m \times l$ matrices and an l-dimensional vector. Then, Eq. (1) is recast into

$$\bar{\mathbf{M}}_\mathbf{x}\ddot{\mathbf{x}} + \bar{\mathbf{C}}_\mathbf{x}\dot{\mathbf{x}} + \bar{\mathbf{K}}_\mathbf{x}\mathbf{x} + \bar{\mathbf{\Phi}}_\mathbf{x}(\mathbf{x}, \dot{\mathbf{x}}, \ddot{\mathbf{x}}) = \bar{\mathbf{Q}}_\mathbf{x}(t). \tag{3}$$

In Eq. (3), $\bar{\mathbf{M}}_\mathbf{x}$, $\bar{\mathbf{C}}_\mathbf{x}$ and $\bar{\mathbf{K}}_\mathbf{x}$ denote the augmented $(l + m) \times l$ mass, damping and stiffness matrices of the system, which are given by (Fragkoulis et al. [2016a])

$$\bar{\mathbf{M}}_\mathbf{x} = \begin{bmatrix} (\mathbf{I}_l - \mathbf{A}^+\mathbf{A})\mathbf{M_x} \\ \mathbf{A} \end{bmatrix}, \quad \bar{\mathbf{C}}_\mathbf{x} = \begin{bmatrix} (\mathbf{I}_l - \mathbf{A}^+\mathbf{A})\mathbf{C_x} \\ \mathbf{E} \end{bmatrix}, \quad \bar{\mathbf{K}}_\mathbf{x} = \begin{bmatrix} (\mathbf{I}_l - \mathbf{A}^+\mathbf{A})\mathbf{K_x} \\ \mathbf{L} \end{bmatrix}, \tag{4}$$

whereas

$$\bar{\mathbf{\Phi}}_\mathbf{x} = \begin{bmatrix} (\mathbf{I}_l - \mathbf{A}^+\mathbf{A})\mathbf{\Phi_x} \\ \mathbf{0} \end{bmatrix}, \quad \bar{\mathbf{Q}}_\mathbf{x}(t) = \begin{bmatrix} (\mathbf{I}_l - \mathbf{A}^+\mathbf{A})\mathbf{Q_x}(t) \\ \mathbf{F} \end{bmatrix} \tag{5}$$

are the augmented $(l + m)$-dimensional vectors of the system nonlinearities and stochastic excitation, respectively. Finally, $\mathbf{I}_l$ corresponds to the $l \times l$ identity matrix, and "+" denotes the M-P matrix inverse operation (see Appendix I). A detailed derivation of Eqs. (3)-(5) can be found in Fragkoulis et al. [2016a].

2.2 Generalized Statistical Linearization Methodology for multi-degree-of-freedom Systems with Singular Parameter Matrices

The statistical linearization methodology for solving approximately and efficiently nonlinear stochastic differential equations (e.g., Roberts and Spanos [2003]; Socha [2007]), has been recently extended and generalized to determine the response statistics of nonlinear dynamical systems with singular parameter matrices (Fragkoulis et al. [2016b]; Kougioumtzoglou et al. [2017]). A concise presentation of the generalized method is included in this section for completeness. The major

objective of the methodology lies in replacing the originally given nonlinear system with an equivalent linear one. This becomes feasible by minimizing, in some sense, the error that is formed by the difference between the two systems. The rationale behind this approach stems from that there are readily available closed form analytical expressions in time and frequency domains for the response characterization of linear systems, which are used to approximate the response of the original nonlinear system. The method is widely utilized in diverse engineering applications due to its versatility in addressing a wide range of nonlinear behaviors, and also due to that it leads to closed-form expressions for determining the parameter matrices of the equivalent linear system (e.g., Spanos and Evangelatos [2010]; Spanos and Kougioumtzoglou [2012]; Fragkoulis et al. [2019]; Mitseas and Beer [2019]; Pasparakis et al. [2021]). The interested reader is directed to Fragkoulis et al. [2016b] and Kougioumtzoglou et al. [2017] for a detailed presentation of the method.

For the application of the generalized statistical linearization methodology, first, an equivalent linear system to the nonlinear system defined in Eq. (3) is considered as

$$(\bar{\mathbf{M}}_{\mathbf{x}} + \bar{\mathbf{M}}_e)\ddot{\mathbf{x}} + (\bar{\mathbf{C}}_{\mathbf{x}} + \bar{\mathbf{C}}_e)\dot{\mathbf{x}} + (\bar{\mathbf{K}}_{\mathbf{x}} + \bar{\mathbf{K}}_e)\mathbf{x} = \bar{\mathbf{Q}}_{\mathbf{x}}(t), \tag{6}$$

where $\bar{\mathbf{M}}_e, \bar{\mathbf{C}}_e$ and $\bar{\mathbf{K}}_e$ denote the augmented equivalent linear mass, damping and stiffness
$(l+m) \times l$ matrices. Then, the error

$$\boldsymbol{\varepsilon} = \bar{\boldsymbol{\Phi}}_{\mathbf{x}}(\mathbf{x}, \dot{\mathbf{x}}, \ddot{\mathbf{x}}) - \bar{\mathbf{M}}_e\ddot{\mathbf{x}} - \bar{\mathbf{C}}_e\dot{\mathbf{x}} - \bar{\mathbf{K}}_e\mathbf{x} \tag{7}$$

is defined as the difference between the nonlinear and the equivalent linear systems, and is minimized in the mean square sense. Further, by adopting the standard Gaussian response assumption (Roberts and Spanos [2003]) a linear set of equations is derived, whose solution leads to the determination of the elements of the equivalent linear matrices. Thus, denoting by $\mathbf{m}_{i*}^{e\mathrm{T}}, \mathbf{c}_{i*}^{e\mathrm{T}}$ and $\mathbf{k}_{i*}^{e\mathrm{T}}$ the i-th row of $\bar{\mathbf{M}}_e, \bar{\mathbf{C}}_e$ and $\bar{\mathbf{K}}_e$, and utilizing the M-P matrix inverses theory yields (Fragkoulis et al. [2016b])

$$\begin{bmatrix} \mathbf{k}_{i*}^{e\mathrm{T}} \\ \mathbf{c}_{i*}^{e\mathrm{T}} \\ \mathbf{m}_{i*}^{e\mathrm{T}} \end{bmatrix} = \mathbb{E}[\hat{\mathbf{x}}\hat{\mathbf{x}}^{\mathrm{T}}]^{+}\mathbb{E}[\hat{\mathbf{x}}\hat{\mathbf{x}}^{\mathrm{T}}]\mathbb{E}\begin{bmatrix} \frac{\partial \bar{\boldsymbol{\Phi}}_{\mathbf{x}}(i)}{\partial \mathbf{x}} \\ \frac{\partial \bar{\boldsymbol{\Phi}}_{\mathbf{x}}(i)}{\partial \dot{\mathbf{x}}} \\ \frac{\partial \bar{\boldsymbol{\Phi}}_{\mathbf{x}}(i)}{\partial \ddot{\mathbf{x}}} \end{bmatrix} + \mathbf{g}(\mathbf{y}), \tag{8}$$

for $i = 1, 2, \ldots, l+m$, where $\hat{\mathbf{x}}$ is the $3l$-dimensional vector $\hat{\mathbf{x}}^{\mathrm{T}} = \begin{bmatrix} \mathbf{x}_s & \dot{\mathbf{x}}_s & \ddot{\mathbf{x}}_s \end{bmatrix}$, $\mathbb{E}[\cdot]$ denotes the expectation operator and "T" represents the matrix transpose

operation. Further, $\mathbf{g}(\mathbf{y})$ is an arbitrary $3l$-dimensional vector (see also Appendix I), which leads to a family of solutions for the determination of the equivalent linear elements. Nevertheless, based on the adoption of the mean square error minimization criterion, it has been proved in Fragkoulis et al. [2016b] that the solution obtained by setting the arbitrary term equal to zero is at least as good, as any other solution that corresponds to a non-zero value for the arbitrary term.

Next, a frequency domain treatment is applied to derive the response statistics of the equivalent system in Eq. (6). This is attained by resorting to the standard input-output relationship of random vibration theory, which connects the power spectrum of the system response to the corresponding excitation spectra. Specifically, the recently derived generalized input-output relationship for systems with singular parameter matrices is employed (Kougioumtzoglou et al. [2017]), i.e.,

$$\mathbf{S}_{\mathbf{x}}(\omega) = \boldsymbol{\alpha}_{\mathbf{x}}(\omega)\mathbf{S}_{\bar{\mathbf{Q}}_{\mathbf{x}}}(\omega)\boldsymbol{\alpha}_{\mathbf{x}}^{\mathrm{T}*}(\omega), \tag{9}$$

where $\mathbf{S}_{\bar{\mathbf{Q}}_{\mathbf{x}}}(\omega)$ and $\mathbf{S}_{\mathbf{x}}(\omega)$ denote, respectively, the excitation and response power spectrum matrices, and $\boldsymbol{\alpha}_{\mathbf{x}}(\omega)$ represents the frequency response function (FRF) matrix of the system. Further, "$*$" corresponds to the conjugate matrix operation. The FRF matrix is given by (Kougioumtzoglou et al. [2017])

$$\boldsymbol{\alpha}_{\mathbf{x}}(\omega) = \left(-\omega^2(\bar{\mathbf{M}}_{\mathbf{x}} + \bar{\mathbf{M}}_{\mathbf{e}}) + i\omega(\bar{\mathbf{C}}_{\mathbf{x}} + \bar{\mathbf{C}}_{\mathbf{e}}) + (\bar{\mathbf{K}}_{\mathbf{x}} + \bar{\mathbf{K}}_{\mathbf{e}})\right)^{+}. \tag{10}$$

Finally, for the determination of the second order response statistics, Eq. (9) is used in conjunction with

$$\mathbb{E}[\mathbf{x}\mathbf{x}^{\mathrm{T}}] = \int_{-\infty}^{\infty} \mathbf{S}_{\mathbf{x}}(\omega)d\omega. \tag{11}$$

2.3 Combined Harmonic Balance and Statistical Linearization Methods for MDOF Systems with Singular Parameter Matrices

In this section a new approach is proposed for determining the response of nonlinear systems with singular matrices subject to stochastic and deterministic excitations. It consists of a combination of the harmonic balance method, which is used for deriving the periodic solution of nonlinear differential equations (Krack and Gross [2019]; Mickens [2010]; Chatterjee [2003]) and the generalized statistical linearization methodology (Fragkoulis et al. [2016b]; Kougioumtzoglou et al.

[2017]). The proposed approach can be construed as a generalization of the methodology developed in Spanos et al. [2019] to account for systems with singular matrices; see also Kong and Spanos [2021] for an extension to nonlinear systems with hysteretic behavior. Further applications of systems subject to combined stochastic and deterministic excitations are found, indicatively, in Anh and Hieu [2012]; Haiwu et al. [2001]; Chen and Zhu [2011]; Megerle et al. [2013]; Spanos and Malara [2020].

2.3.1 Generalized harmonic balance solution framework

Following closely the formulation of Eq. (3), the equations of motion for an l-DOF nonlinear system subject to constraint equations of the form in Eq. (2), as well as to combined deterministic and stochastic excitations, are given by

$$\bar{\mathbf{M}}_{\mathbf{x}}\ddot{\mathbf{x}} + \bar{\mathbf{C}}_{\mathbf{x}}\dot{\mathbf{x}} + \bar{\mathbf{K}}_{\mathbf{x}}\mathbf{x} + \bar{\mathbf{\Phi}}_{\mathbf{x}}(\mathbf{x}, \dot{\mathbf{x}}, \ddot{\mathbf{x}}) = \bar{\mathbf{f}}_{d,\mathbf{x}}(t) + \bar{\mathbf{Q}}_{\mathbf{x}}(t), \tag{12}$$

where $\bar{\mathbf{M}}_{\mathbf{x}}, \bar{\mathbf{C}}_{\mathbf{x}}, \bar{\mathbf{K}}_{\mathbf{x}}$ are defined in Eq. (4) and $\bar{\mathbf{\Phi}}_{\mathbf{x}}(\mathbf{x}, \dot{\mathbf{x}}, \ddot{\mathbf{x}})$ is given by Eq. (5). Further, the deterministic component of the excitation is given by the $(l + m)$-dimensional vector

$$\bar{\mathbf{f}}_{d,\mathbf{x}}(t) = \begin{bmatrix} (\mathbf{I}_l - \mathbf{A}^{+}\mathbf{A})\mathbf{f}_{d,\mathbf{x}}(t) \\ \mathbf{0}_{m\times 1} \end{bmatrix}, \tag{13}$$

whereas the stochastic component $\bar{\mathbf{Q}}_{\mathbf{x}}(t)$ is also given by Eq. (5).

Then, considering the combined excitation of the augmented system in Eq. (12), it is assumed that the system response is written as

$$\mathbf{x}(t) = \mathbf{x}_s(t) + \mathbf{x}_d(t), \tag{14}$$

where $\mathbf{x}_s(t)$ and $\mathbf{x}_d(t)$ denote its stochastic and deterministic components, which account for the corresponding components of the excitation. Next, assuming for simplicity that the stochastic excitation is modeled as a zero-mean Gaussian process, substituting Eq. (14) into the augmented equations of motion in Eq. (12) and ensemble averaging leads to

$$\bar{\mathbf{M}}_{\mathbf{x}}\ddot{\mathbf{x}}_d + \bar{\mathbf{C}}_{\mathbf{x}}\dot{\mathbf{x}}_d + \bar{\mathbf{K}}_{\mathbf{x}}\mathbf{x}_d + \mathbb{E}[\bar{\mathbf{\Phi}}_{\mathbf{x}}(\mathbf{x}_s + \mathbf{x}_d, \dot{\mathbf{x}}_s + \dot{\mathbf{x}}_d, \ddot{\mathbf{x}}_s + \ddot{\mathbf{x}}_d)] = \bar{\mathbf{f}}_{d,\mathbf{x}}(t). \tag{15}$$

Clearly, Eq. (15) consists of a deterministic and an additional stochastic component, which are treated separately in the ensuing analysis. Specifically, first, an extended harmonic balance methodology in conjunction with M-P matrix inverses-based theoretical concepts are applied to the deterministic component in Eq. (15).

Then, the application of the generalized statistical linearization methodology to treat the stochastic component of the system follows.

Next, directing attention to treating the deterministic component of the response, it is assumed that the system nonlinearities are of the polynomial kind. Note that, apart from simplicity, since it facilitates the derivation of closed form solutions for determining the equivalent linear system, this assumption is directly related to the application of the harmonic balance method (Mickens [1984]). Moreover, it is commonly adopted in nonlinear engineering system modeling (Roberts and Spanos [2003]). Further, $\bar{\mathbf{f}}_{d,\mathbf{x}}(t)$ in Eq. (13) is modeled as a monochromatic function of period $T = \frac{2\pi}{\omega_d}$, i.e.,

$$\bar{\mathbf{f}}_{d,\mathbf{x}}(t) = \bar{\mathbf{f}}_{d_1,\mathbf{x}} \cos(\omega_d t) + \bar{\mathbf{f}}_{d_2,\mathbf{x}} \sin(\omega_d t), \tag{16}$$

where $\bar{\mathbf{f}}_{d_1,\mathbf{x}}$ and $\bar{\mathbf{f}}_{d_2,\mathbf{x}}$ are the constant coefficient $(l+m)$-dimensional vectors for the new coordinates system in the phase plane (Krack and Gross [2019]; Hayashi [2014]). In this regard, the deterministic response is written as

$$\mathbf{x}_d(t) = \mathbf{x}_{d_1} \cos(\omega_d t) + \mathbf{x}_{d_2} \sin(\omega_d t), \tag{17}$$

where $\mathbf{x}_{d_1}, \mathbf{x}_{d_2}$ are constant l-dimensional vectors. Substituting Eqs. (16) and (17) into Eq. (15) yields

$$\begin{aligned} &- \omega_d^2 \bar{\mathbf{M}}_{\mathbf{x}}(\mathbf{x}_{d_1} \cos(\omega_d t) + \mathbf{x}_{d_2} \sin(\omega_d t)) + \omega_d \bar{\mathbf{C}}_{\mathbf{x}}(-\mathbf{x}_{d_1} \sin(\omega_d t) + \mathbf{x}_{d_2} \cos(\omega_d t)) \\ &+ \bar{\mathbf{K}}_{\mathbf{x}}(\mathbf{x}_{d_1} \cos(\omega_d t) + \mathbf{x}_{d_2} \sin(\omega_d t)) \\ &+ \mathbb{E}[\bar{\mathbf{\Phi}}_{\mathbf{x}}(\mathbf{x}_s + \mathbf{x}_d, \dot{\mathbf{x}}_s + \dot{\mathbf{x}}_d, \ddot{\mathbf{x}}_s + \ddot{\mathbf{x}}_d)] = \bar{\mathbf{f}}_{d_1,\mathbf{x}} \cos(\omega_d t) + \bar{\mathbf{f}}_{d_2,\mathbf{x}} \sin(\omega_d t). \end{aligned} \tag{18}$$

Then, applying the harmonic balance method, Eq. (18) leads to a set of $2(l+m)$ equations with $2l$ unknowns. Specifically, these are given by

$$\begin{aligned} &- \omega_d^2 \sum_{j=1}^{l} \left(\bar{\mathbf{M}}_{\mathbf{x}}(i,j)\mathbf{x}_{d_1}(j)\right) + \omega_d \sum_{j=1}^{l} \left(\bar{\mathbf{C}}_{\mathbf{x}}(i,j)\mathbf{x}_{d_2}(j)\right) + \sum_{j=1}^{l} \left(\bar{\mathbf{K}}_{\mathbf{x}}(i,j)\mathbf{x}_{d_1}(j)\right) \\ &+ \frac{2}{T}\int_0^T \mathbb{E}[\bar{\mathbf{\Phi}}_{\mathbf{x}}(\mathbf{x}_s + \mathbf{x}_d, \dot{\mathbf{x}}_s + \dot{\mathbf{x}}_d, \ddot{\mathbf{x}}_s + \ddot{\mathbf{x}}_d)](i) \ \cos(\omega_d t)dt = \bar{\mathbf{f}}_{d_1}(i) \end{aligned} \tag{19}$$

and

$$\begin{aligned} &- \omega_d^2 \sum_{j=1}^{l} \left(\bar{\mathbf{M}}_{\mathbf{x}}(i,j)\mathbf{x}_{d_2}(j)\right) - \omega_d \sum_{j=1}^{l} \left(\bar{\mathbf{C}}_{\mathbf{x}}(i,j)\mathbf{x}_{d_1}(j)\right) + \sum_{j=1}^{l} \left(\bar{\mathbf{K}}_{\mathbf{x}}(i,j)\mathbf{x}_{d_2}(j)\right) \\ &+ \frac{2}{T}\int_0^T \mathbb{E}[\bar{\mathbf{\Phi}}_{\mathbf{x}}(\mathbf{x}_s + \mathbf{x}_d, \dot{\mathbf{x}}_s + \dot{\mathbf{x}}_d, \ddot{\mathbf{x}}_s + \ddot{\mathbf{x}}_d)](i) \ \sin(\omega_d t)dt = \bar{\mathbf{f}}_{d_2}(i), \end{aligned} \tag{20}$$

for $i = 1, 2, \ldots, l+m$, where the indexes (i, j) and (j), (i) denote, respectively, the elements in position (i, j), and in positions j and i of the corresponding $(l+m) \times l$ matrices and l-dimensional vectors.

For the solution of the algebraic system defined by Eqs. (19) and (20), and thus, for the computation of the deterministic response component, Eqs. (19) and (20) are equivalently written in the form

$$\mathbf{P}\mathbf{u} = \mathbf{v}, \tag{21}$$

where

$$\mathbf{P} = \begin{bmatrix} \bar{\mathbf{K}}_{\mathbf{x}} - \omega_d^2 \bar{\mathbf{M}}_{\mathbf{x}} & \omega_d \bar{\mathbf{C}}_{\mathbf{x}} \\ -\omega_d \bar{\mathbf{C}}_{\mathbf{x}} & \bar{\mathbf{K}}_{\mathbf{x}} - \omega_d^2 \bar{\mathbf{M}}_{\mathbf{x}} \end{bmatrix} \tag{22}$$

is a $2(l+m) \times 2l$ matrix whose components are given by Eq. (4). Further, the $2l$-dimensional and $2(l+m)$-dimensional vectors $\mathbf{u}$ and $\mathbf{v}$ are given by

$$\mathbf{u} = \begin{bmatrix} \mathbf{x}_{d_1} \\ \mathbf{x}_{d_2} \end{bmatrix} \tag{23}$$

and

$$\mathbf{v} = \begin{bmatrix} \bar{\mathbf{f}}_{d_1} - \frac{2}{T} \int_0^T \mathbb{E}[\bar{\mathbf{\Phi}}_{\mathbf{x}}] \cos(\omega_d t) dt \\ \bar{\mathbf{f}}_{d_2} - \frac{2}{T} \int_0^T \mathbb{E}[\bar{\mathbf{\Phi}}_{\mathbf{x}}] \sin(\omega_d t) dt \end{bmatrix}, \tag{24}$$

respectively. Clearly, Eqs. (19) and (20) or, equivalently, Eqs. (21)-(24) define an overdetermined system of equations, whose solution is derived by resorting to the generalized matrix inverses theory (Campbell and Meyer [2009]; Ben-Israel and Greville [2003]). In particular, by utilizing the concept of the M-P matrix inverses, the general solution to Eq. (21) is given by

$$\mathbf{u} = \mathbf{P}^+\mathbf{v} + (\mathbf{I} - \mathbf{P}^+\mathbf{P})\mathbf{y}, \tag{25}$$

where $\mathbf{y}$ denotes an arbitrary $2l$-dimensional vector (see also Appendix I). It is readily seen that due to the arbitrary vector $\mathbf{y}$, Eq. (25) corresponds to a family of solutions for obtaining the deterministic component of the response, instead of a uniquely defined solution.

However, depending on the rank of the matrix $\mathbf{P}$ in Eq. (22), the selection of a uniquely defined solution is feasible. In particular, if $\mathbf{P}$ has full column rank (Meyer [2000]), the M-P inverse matrix $\mathbf{P}^+$ is written in closed-form as (Lindfield and Penny [2018]; Campbell and Meyer [2009])

$$\mathbf{P}^+ = (\mathbf{P}^*\mathbf{P})^{-1}\mathbf{P}^*. \tag{26}$$

Thus, substituting Eq. (26) into Eq. (25), and taking into account that the M-P inverse of any matrix is uniquely defined (Campbell and Meyer [2009]), Eq. (25) attains a unique solution

$$\mathbf{u} = \mathbf{P}^{+}\mathbf{v}. \tag{27}$$

In passing, it is worth noting that the augmented matrix $\bar{\mathbf{M}}_{\mathbf{x}}$ in the diagonal entries of matrix $\mathbf{P}$ in Eq. (22) ensures that the columns of the latter are independent of each other or, equivalently, that $\mathbf{P}$ has full column rank. Therefore, Eq. (27) constitutes the uniquely defined solution of the system in Eq. (21) or, equivalently, in Eqs. (19) and (20) for determining $\mathbf{x}_{d_1}$ and $\mathbf{x}_{d_2}$. Subsequently, this leads to the derivation of the deterministic response component.

2.3.2 Generalized statistical linearization and averaging treatments

In this section, the recently proposed generalized statistical linearization methodology for systems with singular parameter matrices (Fragkoulis et al. [2016b]; Kougioumtzoglou et al. [2017]) is applied to treat the stochastic component $\mathbf{x}_s(t)$ of the system response.

In this regard, forming the difference between the systems in Eqs. (12) and (15) yields

$$\bar{\mathbf{M}}_{\mathbf{x}}\ddot{\mathbf{x}}_s + \bar{\mathbf{C}}_{\mathbf{x}}\dot{\mathbf{x}}_s + \bar{\mathbf{K}}_{\mathbf{x}}\mathbf{x}_s + \tilde{\mathbf{\Phi}}_{\mathbf{x}} = \bar{\mathbf{Q}}_{\mathbf{x}}(t), \tag{28}$$

where

$$\tilde{\mathbf{\Phi}}_{\mathbf{x}} = \bar{\mathbf{\Phi}}_{\mathbf{x}}(\mathbf{x}_s + \mathbf{x}_d, \dot{\mathbf{x}}_s + \dot{\mathbf{x}}_d, \ddot{\mathbf{x}}_s + \ddot{\mathbf{x}}_d) - \mathbb{E}[\bar{\mathbf{\Phi}}_{\mathbf{x}}(\mathbf{x}_s + \mathbf{x}_d, \dot{\mathbf{x}}_s + \dot{\mathbf{x}}_d, \ddot{\mathbf{x}}_s + \ddot{\mathbf{x}}_d)] \tag{29}$$

is the zero-mean vector of the system nonlinearities, and $\mathbf{x}_s$ is the stochastic component of the response. Next, following closely the formulation of Eq. (6), the linear equivalent system to Eq. (28) becomes

$$(\bar{\mathbf{M}}_{\mathbf{x}} + \bar{\mathbf{M}}_e)\ddot{\mathbf{x}}_s + (\bar{\mathbf{C}}_{\mathbf{x}} + \bar{\mathbf{C}}_e)\dot{\mathbf{x}}_s + (\bar{\mathbf{K}}_{\mathbf{x}} + \bar{\mathbf{K}}_e)\mathbf{x}_s = \bar{\mathbf{Q}}_{\mathbf{x}}(t). \tag{30}$$

Then, the error function which is defined as the difference between Eqs. (28) and (30) is formed, and minimized by adopting the mean square minimization criterion (Fragkoulis et al. [2016b]). Further, considering that the arbitrary vector $\mathbf{g}(\mathbf{y})$ in Eq. (8) is the null vector, the elements of the $(l+m)\times l$ matrices $\bar{\mathbf{M}}_e$, $\bar{\mathbf{C}}_e$ and $\bar{\mathbf{K}}_e$ are readily determined by

$$\begin{bmatrix} \mathbf{k}_{i*}^{e\mathrm{T}} \\ \mathbf{c}_{i*}^{e\mathrm{T}} \\ \mathbf{m}_{i*}^{e\mathrm{T}} \end{bmatrix} = \mathbb{E}[\hat{\mathbf{x}}\hat{\mathbf{x}}^{\mathrm{T}}]^{+}\mathbb{E}[\hat{\mathbf{x}}\hat{\mathbf{x}}^{\mathrm{T}}]\mathbb{E}\begin{bmatrix} \frac{\partial\tilde{\mathbf{\Phi}}_{\mathbf{x}}(i)}{\partial\mathbf{x}} \\ \frac{\partial\bar{\mathbf{\Phi}}_{\mathbf{x}}(i)}{\partial\dot{\mathbf{x}}} \\ \frac{\partial\bar{\mathbf{\Phi}}_{\mathbf{x}}(i)}{\partial\ddot{\mathbf{x}}} \end{bmatrix}, \tag{31}$$

where $\tilde{\mathbf{\Phi}}_{\mathbf{x}}(i)$, $i = 1, 2, \ldots, l + m$, denotes the i-th component of the nonlinear vector in Eq. (29).

Clearly, the nonlinear vector $\tilde{\mathbf{\Phi}}_{\mathbf{x}}$ in Eq. (29) not only depends on the stochastic response component $\mathbf{x}_s(t)$ (and its first and second order derivatives) but also on the deterministic (harmonic) component of the system response, i.e., $\mathbf{x}_d(t)$, and its first and second order derivatives. Thus, the elements m^e_{ij}, c^e_{ij}, k^e_{ij}, for $i = 1, 2, \ldots, l+m$ and $j = 1, 2, \ldots, m$, obtained in Eq. (31) are also time dependent. Nevertheless, by relying on the harmonic balance method, the slowly varying over a period T of oscillation components of matrices $\bar{\mathbf{M}}_e, \bar{\mathbf{C}}_e$ and $\bar{\mathbf{K}}_e$ are approximated by their average over T (Spanos et al. [2019]; Hayashi [2014]), i.e.,

$$\bar{\mathbf{M}}^{av}_e = \frac{1}{T}\int_0^T \bar{\mathbf{M}}_e dt, \quad \bar{\mathbf{C}}^{av}_e = \frac{1}{T}\int_0^T \bar{\mathbf{C}}_e dt, \quad \bar{\mathbf{K}}^{av}_e = \frac{1}{T}\int_0^T \bar{\mathbf{K}}_e dt. \tag{32}$$

The matrices of Eq. (32) serve, in essence, as the closed form solutions which are used to approximate the equivalent mass, damping and stiffness matrices of the linear system in Eq. (30), which becomes

$$(\bar{\mathbf{M}}_{\mathbf{x}} + \bar{\mathbf{M}}^{av}_e)\ddot{\mathbf{x}}_s + (\bar{\mathbf{C}}_{\mathbf{x}} + \bar{\mathbf{C}}^{av}_e)\dot{\mathbf{x}}_s + (\bar{\mathbf{K}}_{\mathbf{x}} + \bar{\mathbf{K}}^{av}_e)\mathbf{x}_s = \bar{\mathbf{Q}}_{\mathbf{x}}(t). \tag{33}$$

Subsequently, a frequency domain approach is invoked to derive the response statistics of the equivalent system in Eq. (33). In this regard, taking into account Eqs. (32) and (33), the FRF matrix is derived by Eq. (10), i.e.,

$$\boldsymbol{\alpha}_{\mathbf{x}}(\omega) = \left(-\omega^2(\bar{\mathbf{M}}_{\mathbf{x}} + \bar{\mathbf{M}}^{av}_e) + i\omega(\bar{\mathbf{C}}_{\mathbf{x}} + \bar{\mathbf{C}}^{av}_e) + (\bar{\mathbf{K}}_{\mathbf{x}} + \bar{\mathbf{K}}^{av}_e)\right)^{+}, \tag{34}$$

and thus, the response power spectrum $\mathbf{S}_{\mathbf{x}_s}(\omega)$ is found by Eq. (9). Finally, the second order response statistics of the equivalent system in Eq. (33), are computed by Eq. (11), i.e.,

$$\mathbb{E}[\mathbf{x}^2_s(i)] = \int_{-\infty}^{\infty} S_{\mathbf{x}_s(i)\mathbf{x}_s(i)}(\omega)d\omega, \quad \mathbb{E}[\dot{\mathbf{x}}^2_s(i)] = \int_{-\infty}^{\infty} \omega^2 S_{\mathbf{x}_s(i)\mathbf{x}_s(i)}(\omega)d\omega, \tag{35}$$

for $i = 1, 2, \ldots, l$. Note, in passing, that the integrals in Eq. (35) are calculated numerically in the ensuing analysis. However, closed-form solutions for calculating random vibration integrals are also available (Roberts and Spanos [2003]).

Clearly, Eq. (35) in conjunction with the generalized input-output relationship in Eq. (9), as well as Eq. (27), constitute a coupled nonlinear system of equations to be solved for determining the system response. The following simple iterative

procedure is used to solve the coupled nonlinear system: i. The scheme is initialized by setting the nonlinear vector $\tilde{\mathbf{\Phi}}_{\mathbf{x}}$ in the governing equations of motion equal to the null vector. Then, the deterministic response $\mathbf{x}_d$ is obtained. ii. Employing Eq. (9), as well as Eq. (35), the variance of the stochastic response $\mathbf{x}_s$ is derived. iii. Using step (ii.), Eq. (27) yields the deterministic response $\mathbf{x}_d$. Then, the (updated) values of matrices $\bar{\mathbf{M}}_e^{av}$, $\bar{\mathbf{C}}_e^{av}$ and $\bar{\mathbf{K}}_e^{av}$ are calculated. iv. Steps (ii.) and (iii.) are repeated until satisfactory accuracy for the response variance is attained.

3 Numerical examples

In this section, two numerical examples are used to validate the herein proposed approach and assess its versatility. The obtained results are compared with corresponding results which are derived by following the standard solution framework in Spanos et al. [2019].

3.1 3-DOF Nonlinear System with Singular Matrices

The 3-DOF nonlinear system in Fig. 1(a) is considered, where mass m_1 is connected to the foundation by a linear spring of stiffness k_1, a nonlinear inerter (e.g., Smith [2002]; Marian and Giaralis [2014]) and a nonlinear damper. The damping force is given by $c_1\dot{q}_1(1+\varepsilon_2\dot{q}_1^2)$ and the force due to the nonlinear inerter is given by $m_1\ddot{q}_1(1+\varepsilon_1\dot{q}_1^2)$, where q_i ($i = 1, 2, 3$) denotes the displacement of the i-th mass, and ε_1 and ε_2 denote the magnitude of the nonlinearity for each case. Further, mass m_1 is connected to masses m_2 and m_3 by linear springs of stiffness k_2 and k_4, respectively. Finally, mass m_2 is connected to mass m_3 by a linear spring of stiffness k_3 and a linear damper of damping c_2. A force $Q_3(t)$, which is modeled as a Gaussian white noise stochastic process with constant spectral density S_0, and a deterministic force given by $f_{d_2,3}\sin(\omega_d t)$ are applied on mass m_3.

Next, the standard solution framework in Spanos et al. [2019] is applied for deriving the system response variance. In this regard, the parameter values $m_1 = m_3 = 2$, $m_2 = 1$, $c_1 = c_2 = 0.1$, $k_1 = k_2 = k_3 = k_4 = 1$, in conjunction with the parameter values $\varepsilon_1 = \varepsilon_2 = 1$ as well as $S_0 = 10^{-3}$ for $0 < \omega < 2\pi$, and

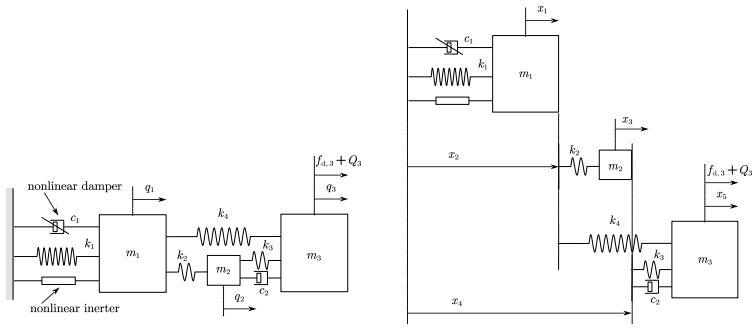

(a) (b)

Fig. 1. (a) A 3-DOF nonlinear system subject to stochastic and deterministic excitations. (b) The nonlinear system of Fig. 1(a) modeled by employing redundant coordinates.

$f_{d_2,3} = 0.4, \omega_d = \pi$, are considered. The standard approach leads to

$$\sigma_{q_1}^2 = 0.0478, \quad \sigma_{\dot{q}_1}^2 = 0.0103, \quad \sigma_{\ddot{q}_1}^2 = 0.0061, \tag{36}$$

$$\sigma_{q_2}^2 = 0.0051, \quad \sigma_{\dot{q}_2}^2 = 0.0029, \quad \sigma_{\ddot{q}_2}^2 = 0.0052, \tag{37}$$

$$\sigma_{q_3}^2 = 0.0033, \quad \sigma_{\dot{q}_3}^2 = 0.0082, \quad \sigma_{\ddot{q}_3}^2 = 0.0438. \tag{38}$$

Then, considering the redundant coordinates vector $\mathbf{x}^{\mathrm{T}} = \begin{bmatrix} x_1 & x_2 & x_3 & x_4 & x_5 \end{bmatrix}$, the 3-DOF system in Fig. 1(a) is decomposed into its constituent parts as shown in Fig. 1(b). Further, taking into account the constraint equations connecting the subsystems in Fig. 1(b), matrix $\mathbf{A}$ in Eq. (2) becomes

$$\mathbf{A} = \begin{bmatrix} 1 & -1 & 0 & 0 & 0 \\ 0 & 1 & 1 & -1 & 0 \end{bmatrix}, \tag{39}$$

whereas $\mathbf{E} = \mathbf{L} = \mathbf{0}_{2\times 5}$ and $\mathbf{F} = \mathbf{0}_{2\times 1}$. Thus, Eq. (12) is formed, where

$$\bar{\mathbf{M}}_{\mathbf{x}} = \begin{bmatrix} 0.4m_1 & 0.2m_2 & 0.2m_2 & 0.2m_3 & 0.2m_3 \\ 0.4m_1 & 0.2m_2 & 0.2m_2 & 0.2m_3 & 0.2m_3 \\ -0.2m_1 & 0.4m_2 & 0.4m_2 & 0.4m_3 & 0.4m_3 \\ 0.2m_1 & 0.6m_2 & 0.6m_2 & 0.6m_3 & 0.6m_3 \\ 0 & 0 & 0 & m_3 & m_3 \\ 1 & -1 & 0 & 0 & 0 \\ 0 & 1 & 1 & -1 & 0 \end{bmatrix}, \bar{\mathbf{C}}_{\mathbf{x}} = \begin{bmatrix} 0.4c_1 & 0 & 0 & 0 & 0 \\ 0.4c_1 & 0 & 0 & 0 & 0 \\ -0.2c_1 & 0 & 0 & 0 & 0 \\ 0.2c_1 & 0 & 0 & 0 & 0 \\ 0 & 0 & 0 & 0 & c_2 \\ 0 & 0 & 0 & 0 & 0 \\ 0 & 0 & 0 & 0 & 0 \end{bmatrix} \tag{40}$$

and

$$\bar{\mathbf{K}}_{\mathbf{x}} = \begin{bmatrix} 0.4k_1 & 0.2k_4 & -0.2k_2 & -0.2k_4 & -0.2k_4 \\ 0.4k_1 & 0.2k_4 & -0.2k_2 & -0.2k_4 & -0.2k_4 \\ -0.2k_1 & -0.6k_4 & 0.6k_2 & 0.6k_4 & 0.6k_4 \\ 0.2k_1 & -0.4k_4 & 0.4k_2 & 0.4k_4 & 0.4k_4 \\ 0 & -k_4 & 0 & k_4 & k_3 + k_4 \\ 0 & 0 & 0 & 0 & 0 \\ 0 & 0 & 0 & 0 & 0 \end{bmatrix}, \tag{41}$$

and the nonlinear vector in Eq. (5) becomes

$$\bar{\mathbf{\Phi}}_{\mathbf{x}}^{\mathrm{T}}(\mathbf{x}, \dot{\mathbf{x}}, \ddot{\mathbf{x}}) = (\varepsilon_1 m_1 \dot{x}_1^2 \ddot{x}_1 + \varepsilon_2 c_1 \dot{x}_1^3) \begin{bmatrix} 0.4 & 0.4 & -0.2 & 0.2 & 0 & 0 & 0 \end{bmatrix}. \tag{42}$$

Also, Eqs. (5) and (13) yield, respectively,

$$\begin{aligned} \bar{\mathbf{Q}}_{\mathbf{x}}^{\mathrm{T}} &= Q_3(t) \begin{bmatrix} 0.2 & 0.2 & 0.4 & 0.6 & 1 & 0 & 0 \end{bmatrix}, \\ \bar{\mathbf{f}}_{d,\mathbf{x}}^{\mathrm{T}} &= f_{d_2,3} \sin(\omega_d t) \begin{bmatrix} 0.2 & 0.2 & 0.4 & 0.6 & 1 & 0 & 0 \end{bmatrix}. \end{aligned} \tag{43}$$

Next, the herein generalized harmonic balance method for systems with singular matrices is applied to the system defined by the singular parameter matrices in Eqs. (40) and (41). Thus, taking into account the decomposition of the system response into a stochastic and a deterministic component, i.e., $\mathbf{x}_s^{\mathrm{T}} = \begin{bmatrix} x_{s,1} & x_{s,2} & x_{s,3} & x_{s,4} & x_{s,5} \end{bmatrix}$ and $\mathbf{x}_d^{\mathrm{T}} = \begin{bmatrix} x_{d,1} & x_{d,2} & x_{d,3} & x_{d,4} & x_{d,5} \end{bmatrix}$, Eq. (42) yields

$$\begin{aligned} \mathbb{E}[\bar{\mathbf{\Phi}}_{\mathbf{x}}]^{\mathrm{T}} = &\left(\varepsilon_1 m_1 (\dot{x}_{d,1}^2 \ddot{x}_{d,1} + \sigma_{\dot{x}_{s,1}}^2 \ddot{x}_{d,1}) + \varepsilon_2 c_1 (\dot{x}_{d,1}^3 + 3\dot{x}_{d,1} \sigma_{\dot{x}_{s,1}}^2)\right) \\ &\times \begin{bmatrix} 0.4 & 0.4 & -0.2 & 0.2 & 0 & 0 & 0 \end{bmatrix}. \end{aligned} \tag{44}$$

Further, since the 14×10 matrix $\mathbf{P}$ in Eq. (22) has full rank, i.e., $rank(\mathbf{P}) = 10$, Eq. (27) is used instead of Eq. (25) to derive a unique solution for the periodic response vector (see also Eqs. (19) and (20)). Finally, applying the generalized statistical linearization

method, in conjunction with the averaging treatment, Eqs. (32) yields

$$\bar{\mathbf{C}}_e^{av} = 0.6\varepsilon_2 c_1 \sigma_{\dot{x}_{s,1}}^2 \begin{bmatrix} 2H(6,6) & 2H(7,6) & 2H(8,6) & 2H(9,6) & 2H(10,6) \\ 2H(6,6) & 2H(7,6) & 2H(8,6) & 2H(9,6) & 2H(10,6) \\ -H(6,6) & -H(7,6) & -H(8,6) & -H(9,6) & -H(10,6) \\ H(6,6) & H(7,6) & H(8,6) & H(9,6) & H(10,6) \\ 0 & 0 & 0 & 0 & 0 \\ 0 & 0 & 0 & 0 & 0 \\ 0 & 0 & 0 & 0 & 0 \end{bmatrix} + \varepsilon_2 c_1 \omega_d^2 (x_{d_1,1}^2 + x_{d_2,1}^2) \begin{bmatrix} 0.6 & 0 & 0 & 0 & 0 \\ 0.6 & 0 & 0 & 0 & 0 \\ -0.3 & 0 & 0 & 0 & 0 \\ 0.3 & 0 & 0 & 0 & 0 \\ 0 & 0 & 0 & 0 & 0 \\ 0 & 0 & 0 & 0 & 0 \\ 0 & 0 & 0 & 0 & 0 \end{bmatrix} \tag{45}$$

and

$$\bar{\mathbf{M}}_e^{av} = 0.2\varepsilon_1 m_1 \sigma_{\dot{x}_{s,1}}^2 \begin{bmatrix} 2H(11,11) & 2H(12,11) & 2H(13,11) & 2H(14,11) & 2H(15,11) \\ 2H(11,11) & 2H(12,11) & 2H(13,11) & 2H(14,11) & 2H(15,11) \\ -H(11,11) & -H(12,11) & -H(13,11) & -H(14,11) & -H(15,11) \\ H(11,11) & H(12,11) & H(13,11) & H(14,11) & H(15,11) \\ 0 & 0 & 0 & 0 & 0 \\ 0 & 0 & 0 & 0 & 0 \\ 0 & 0 & 0 & 0 & 0 \end{bmatrix} + \varepsilon_1 m_1 \omega_d^2 (x_{d_1,1}^2 + x_{d_2,1}^2) \begin{bmatrix} 0.2 & 0 & 0 & 0 & 0 \\ 0.2 & 0 & 0 & 0 & 0 \\ -0.1 & 0 & 0 & 0 & 0 \\ 0.1 & 0 & 0 & 0 & 0 \\ 0 & 0 & 0 & 0 & 0 \\ 0 & 0 & 0 & 0 & 0 \\ 0 & 0 & 0 & 0 & 0 \end{bmatrix}. \tag{46}$$

The terms $H(i,j), i,j = 1,2,\ldots,15$, in Eqs. (45) and (46) denote the (i,j) element of the 15×15 matrix $\mathbb{E}[\hat{\mathbf{x}}\hat{\mathbf{x}}^{\mathrm{T}}]^{+}\mathbb{E}[\hat{\mathbf{x}}\hat{\mathbf{x}}^{\mathrm{T}}]$ in Eq. (31) (see also Fragkoulis et al. [2016b]).

Then, the coupled set of algebraic equations formed by Eq. (35), Eq. (9) and Eq. (27) is solved for determining the stochastic and deterministic components of the response. This is attained by employing the iterative scheme included in section "Generalized statistical linearization and averaging treatments". In this regard, considering the initial values $\bar{\mathbf{M}}_e^{av} = \bar{\mathbf{C}}_e^{av} = \mathbf{0}$ and $x_{d_1} = x_{d_2} = 0$, the stochastic component is derived based on the criterion $\left|\frac{\bar{\mathbf{M}}_{e,j+1}^{av} - \bar{\mathbf{M}}_{e,j}^{av}}{\bar{\mathbf{M}}_{e,j}^{av}}\right| < 10^{-5}$ and $\left|\frac{\bar{\mathbf{C}}_{e,j+1}^{av} - \bar{\mathbf{C}}_{e,j}^{av}}{\bar{\mathbf{C}}_{e,j}^{av}}\right| <$

10^{-5}, whereas a similar criterion is used to obtain the deterministic components x_{d_1}, x_{d_2}. The iterative scheme stops after 5 iterations, when satisfactory accuracy for the response velocity variance $\sigma^2_{\dot{x}_{s,1}}$ is attained (see Eqs. (45) and (46)).

Finally, substituting Eq. (17) into Eq. (14), and successively ensemble and temporal averaging to treat, respectively, the stochastic and deterministic components of the response, yields

$$\left\langle \mathbb{E}[x_i^2] \right\rangle = \sigma^2_{x_{s,1}} + \frac{x^2_{d_1,i} + x^2_{d_2,i}}{2}, \quad \left\langle \mathbb{E}[\dot{x}_i^2] \right\rangle = \sigma^2_{\dot{x}_{s,1}} + \frac{\omega_d^2 (x^2_{d_1,i} + x^2_{d_2,i})}{2} \tag{47}$$

and

$$\left\langle \mathbb{E}[\ddot{x}_i^2] \right\rangle = \sigma^2_{\ddot{x}_{s,1}} + \frac{\omega_d^4}{2} (x^2_{d_1,i} + x^2_{d_2,i}), \tag{48}$$

for $i = 1, 2, \ldots, 5$, where $\langle \cdot \rangle$ denotes the temporal averaging operation. Eqs. (47) and (48), in conjunction with the results of the iterative scheme above yield

$$\sigma^2_{x_1} = 0.0478, \quad \sigma^2_{\dot{x}_1} = 0.0103, \quad \sigma^2_{\ddot{x}_1} = 0.0061, \tag{49}$$

$$\sigma^2_{x_3} = 0.0051, \quad \sigma^2_{\dot{x}_3} = 0.0029, \quad \sigma^2_{\ddot{x}_3} = 0.0052, \tag{50}$$

$$\sigma^2_{x_5} = 0.0033, \quad \sigma^2_{\dot{x}_5} = 0.0082, \quad \sigma^2_{\ddot{x}_5} = 0.0438. \tag{51}$$

Comparing Eqs. (49)-(51) with Eqs. (36)-(38), it is readily seen that the herein proposed framework is in total agreement with the standard approach in Spanos et al. [2019].

3.2 2-DOF Nonlinear Structural System with Singular Parameter Matrices

In this example, the application of the herein proposed framework to a wider magnitude range of system nonlinearities is demonstrated. In this regard, the 2-DOF system of rigid masses m_1 and m_2 in Fig. 2(a) is considered. Mass m_1 is connected to the foundation by a nonlinear inerter and a nonlinear spring, whose forces are $m_1 \ddot{q}_1 (1 + \varepsilon_1 \dot{q}_1^2)$ and $k_1 q_1 (1 + \varepsilon_2 q_1^2)$, respectively, where q_i ($i = 1, 2$) denotes the displacement of the i-th mass, and $\varepsilon_1, \varepsilon_2$ the magnitude of the nonlinearities. Further, mass m_1 is connected to mass m_2 by a linear spring of stiffness k_2 and a linear damper of damping c_2. The system is excited by combined stochastic and deterministic forces applied on mass m_1. In particular, $Q_1(t)$ is modeled as a Gaussian white noise stochastic process with constant spectral density S_0 and the deterministic force has the form $f_{d_2,1} \sin(\omega_d t)$. Further, considering

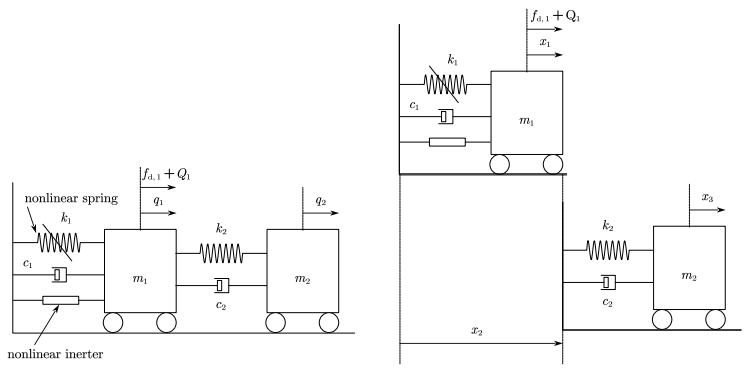

(a) (b)

Fig. 2. (a) A 2-DOF nonlinear system subject to stochastic and deterministic excitations. (b) The nonlinear system of Fig. 2(a) modeled by employing an additional redundant coordinate.

the parameter values $m_1 = m_2 = 1$, $c_1 = c_2 = 0.2$, $k_1 = k_2 = 1$, $S_0 = 10^{-2}$ $(0 < \omega < 2\pi)$ and $f_{d_2,1} = 0.4$, $\omega_d = \pi$, the system response variance is determined by applying the standard approach in Spanos et al. [2019]. In addition, the magnitude ε of nonlinearities, where $\varepsilon_1 = \varepsilon_2 = \varepsilon$, is taking values in the interval $[0, 5]$. The results are depicted by the solid line in Fig. 3.

Next, considering the redundant coordinates vector $\mathbf{x} = \begin{bmatrix} x_1 & x_2 & x_3 \end{bmatrix}$, the 2-DOF system of Fig. 2(a) is decomposed into its partial subsystems, as shown in Fig. 2(b). In this regard, Eq. (2) is formed, where

$$\mathbf{A} = \begin{bmatrix} 1 & -1 & 0 \end{bmatrix}, \tag{52}$$

$\mathbf{E} = \mathbf{L} = \mathbf{0}_{1\times 3}$ and the vector $\mathbf{F}$ degenerates to $\mathbf{F} = 0$. Thus, the parameter matrices in Eq. (12) are given by

$$\bar{\mathbf{M}}_{\mathbf{x}} = \begin{bmatrix} 0.5m_1 & 0.5m_2 & 0.5m_2 \\ 0.5m_1 & 0.5m_2 & 0.5m_2 \\ 0 & m_2 & m_2 \\ 1 & -1 & 0 \end{bmatrix}, \bar{\mathbf{C}}_{\mathbf{x}} = \begin{bmatrix} 0.5c_1 & 0 & 0 \\ 0.5c_1 & 0 & 0 \\ 0 & 0 & c_2 \\ 0 & 0 & 0 \end{bmatrix}, \bar{\mathbf{K}}_{\mathbf{x}} = \begin{bmatrix} 0.5k_1 & 0 & 0 \\ 0.5k_1 & 0 & 0 \\ 0 & 0 & k_2 \\ 0 & 0 & 0 \end{bmatrix}, \tag{53}$$

whereas Eqs. (5) and (13), respectively, yield

$$\bar{\mathbf{\Phi}}_{\mathbf{x}}^{\mathrm{T}}(\mathbf{x}, \dot{\mathbf{x}}, \ddot{\mathbf{x}}) = (m_1\varepsilon_1\dot{x}_1^2\ddot{x}_1 + k_1\varepsilon_2 x_1^3) \begin{bmatrix} 0.5 & 0.5 & 0 & 0 \end{bmatrix}, \quad \bar{\mathbf{Q}}_{\mathbf{x}}^{\mathrm{T}} = Q_1(t) \begin{bmatrix} 0.5 & 0.5 & 0 & 0 \end{bmatrix} \tag{54}$$

and

$$\bar{\mathbf{f}}_{d,\mathbf{x}}^{\mathrm{T}} = f_{d_2,1}\sin(\omega_d t)\begin{bmatrix}0.5 & 0.5 & 0 & 0\end{bmatrix}. \tag{55}$$

For the application of the harmonic balance method, the system response is decomposed into its stochastic $\mathbf{x}_s^{\mathrm{T}} = \begin{bmatrix}x_{s,1} & x_{s,2} & x_{s,3}\end{bmatrix}$ and deterministic $\mathbf{x}_d^{\mathrm{T}} = \begin{bmatrix}x_{d,1} & x_{d,2} & x_{d,3}\end{bmatrix}$ components, and thus, substituting Eq. (17) into Eq. (54) and ensemble averaging yields

$$\mathbb{E}[\bar{\mathbf{\Phi}}_{\mathbf{x}}]^{\mathrm{T}} = \left(m_1\varepsilon_1(\dot{x}_{d,1}^2\ddot{x}_{d,1} + \sigma_{\dot{x}_{s,1}}^2\ddot{x}_{d,1}) + k_1\varepsilon_2(x_{d,1}^3 + 3x_{d,1}\sigma_{x_{s,1}}^2)\right)\begin{bmatrix}0.5 & 0.5 & 0 & 0\end{bmatrix}. \tag{56}$$

Then, the overdetermined system of equations defined by Eq. (21) (or, equivalently, by
Eqs. (19) and (20)) is solved. To this end, it is noted that the 8×6 matrix $\mathbf{P}$ in Eq. (22) has full rank. Hence, Eq. (27) leads to a uniquely defined periodic response component. Subsequently, the generalized statistical linearization method is used in conjunction with the averaging treatment to treat the stochastic component of the response. In this regard, Eq. (32) implies

$$\bar{\mathbf{K}}_e^{av} = 1.5k_1\varepsilon_2\sigma_{x_{s,1}}^2\begin{bmatrix}H(1,1) & H(2,1) & H(3,1)\\ H(1,1) & H(2,1) & H(3,1)\\ 0 & 0 & 0\\ 0 & 0 & 0\end{bmatrix} + 3k_1\varepsilon_2\begin{bmatrix}\frac{(x_{d_1,1}^2+x_{d_2,1}^2)}{2} & 0 & 0\\ \frac{(x_{d_1,1}^2+x_{d_2,1}^2)}{2} & 0 & 0\\ 0 & 0 & 0\\ 0 & 0 & 0\end{bmatrix} \tag{57}$$

and

$$\bar{\mathbf{M}}_e^{av} = 0.5m_1\varepsilon_1\sigma_{\dot{x}_{s,1}}^2\begin{bmatrix}H(7,7) & H(8,7) & H(9,7)\\ H(7,7) & H(8,7) & H(9,7)\\ 0 & 0 & 0\\ 0 & 0 & 0\end{bmatrix} + m_1\varepsilon_1\begin{bmatrix}\frac{\omega_d^2(x_{d_1,1}^2+x_{d_2,1}^2)}{2} & 0 & 0\\ \frac{\omega_d^2(x_{d_1,1}^2+x_{d_2,1}^2)}{2} & 0 & 0\\ 0 & 0 & 0\\ 0 & 0 & 0\end{bmatrix}, \tag{58}$$

where $H(i,j), i,j = 1,2,\ldots,9$, denote the (i,j) element of matrix $\mathbb{E}[\hat{\mathbf{x}}\hat{\mathbf{x}}^{\mathrm{T}}]^{+}\mathbb{E}[\hat{\mathbf{x}}\hat{\mathbf{x}}^{\mathrm{T}}]$ in Eq. (31).

Then, the iterative scheme in section "Generalized statistical linearization and averaging treatments" is employed to solve the coupled set of algebraic equations formed by Eqs. (35), Eq. (9) and Eq. (27), and thus, to derive the variance of the stochastic response. Considering the dependence between the stochastic and deterministic components (see Eqs. (56)-(58)), the scheme is initialized

by using $\bar{\mathbf{M}}_e^{av} = \mathbf{0}, \bar{\mathbf{K}}_e^{av} = \mathbf{0}$ and $x_{d_1} = x_{d_2} = 0$. Then, the stochastic and deterministic components are derived based on the criterion $\left|\frac{\bar{\mathbf{M}}_{e,j+1}^{av} - \bar{\mathbf{M}}_{e,j}^{av}}{\bar{\mathbf{M}}_{e,j}^{av}}\right| < 10^{-5}$ and $\left|\frac{\bar{\mathbf{K}}_{e,j+1}^{av} - \bar{\mathbf{K}}_{e,j}^{av}}{\bar{\mathbf{K}}_{e,j}^{av}}\right| < 10^{-5}$, as well as a similar criterion for x_{d_1}, x_{d_2}. The iterative scheme continues until reaching satisfactory accuracy for the response displacement and velocity variance $\sigma_{x_{s,1}}^2$ and $\sigma_{\dot{x}_{s,1}}^2$.

Finally, the system response variance is determined by utilizing Eqs. (47) and (48). The obtained results for different values of $\varepsilon_1 = \varepsilon_2 = \varepsilon \in [0, 5]$ are represented by dots in Fig. 3. They are in complete agreement with the corresponding results obtained by applying the standard approach in Spanos et al. [2019] (solid line). Thus, the herein developed combination of the M-P matrix inverses-based statistical linearization and harmonic balance scheme constitutes a generalization of the formulation in Spanos et al. [2019] to account for systems with singular parameter matrices. Note, in passing, that a normalization with respect to the analytical results for the linear case, i.e., $\varepsilon_1 = \varepsilon_2 = 0$, is considered for both solution frameworks to show the considerable nonlinearity effect on the system response.

4 Conclusions

In this paper, a generalized inverse matrix-based approach has been developed to determine the response of multi-degree-of-freedom (MDOF) nonlinear systems with singular parameter matrices subject to combined stochastic and deterministic excitations. Singular matrices appear, indicatively, due to the presence of constraint equations, or due to deriving the equations of motion by adopting a redundant (dependent) coordinates framework. The latter can be very advantageous, especially for classes of complex multi-body systems, where depending on the complexity of the system under consideration, adopting additional (dependent) coordinates facilitates the derivation of the equations of motion, and in general leads to solution frameworks of reduced computational cost. However, it also limits the modeler since it yields singular parameter matrices in the equations of motion, and thus, the standard solution frameworks and techniques of random vibration whose implementation rely on invertible matrices, become inapplicable. In this regard, considering that the system excitation is modeled as a combination of both stochastic and deterministic forces, the Moore-Penrose (M-P) matrix inverses theory has been utilized to circumvent the limitations due to the presence

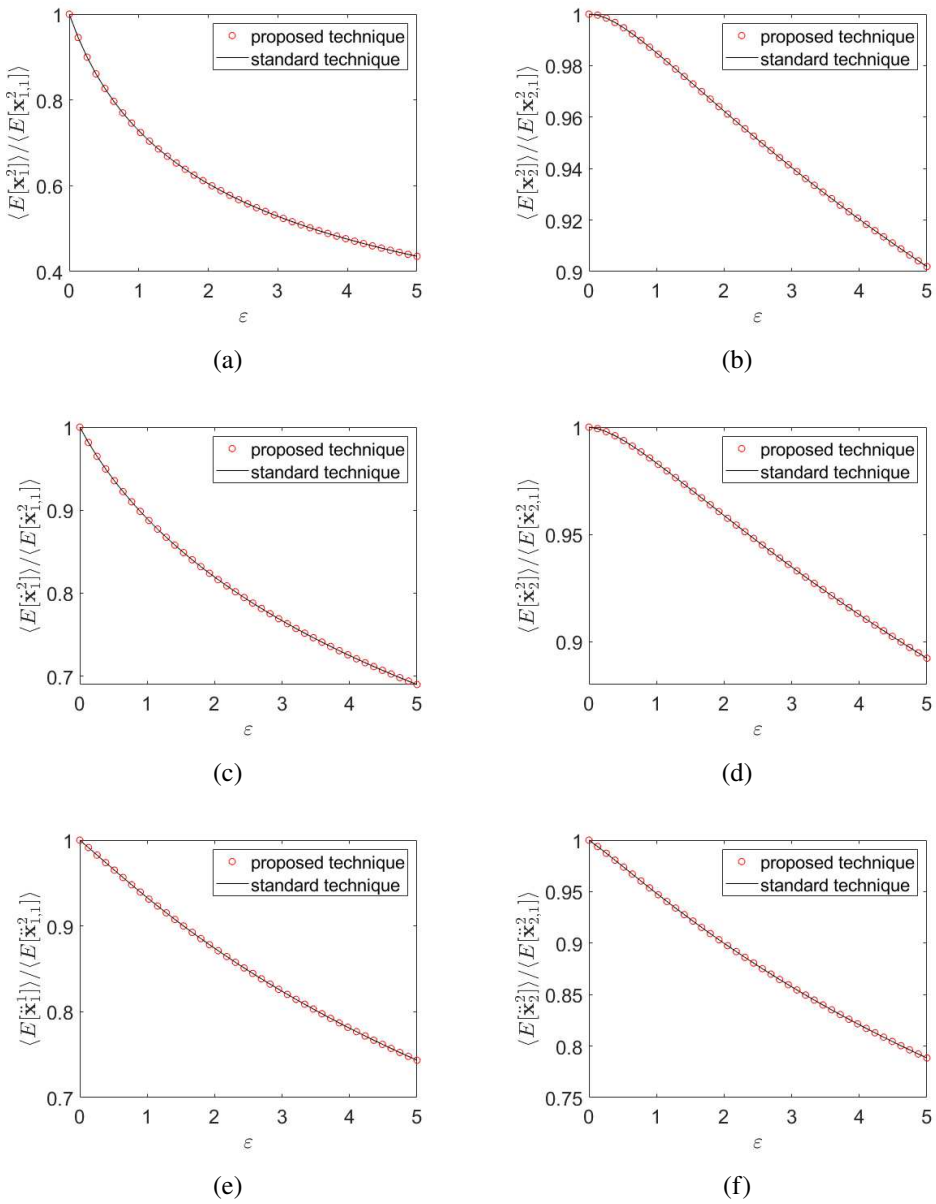

Fig. 3. Normalized response variance of the nonlinear structural system in Figs. 2(a)-2(b) vs. nonlinearity magnitude. Comparison between the standard and the proposed techniques. (a) 1st DOF response displacement variance; (b) 2nd DOF response displacement variance; (c) 1st DOF response velocity variance; (d) 2nd DOF response velocity variance; (e) 1st DOF response acceleration variance; (f) 2nd DOF response acceleration variance

of singular matrices in the equations of motion. Further, considering that the system response consists of a stochastic and a deterministic part, a combination of the statistical linearization and harmonic balance methods has been employed for its determination. Specifically, first, the harmonic balance method has been extended for treating the deterministic component of the response. Its application has resulted in an overdetermined system of equations to be solved for computing the coefficients of the method. Then, a unique solution has been selected by adopting an M-P matrix inverses theory-based solution framework. Subsequently, the generalized statistical linearization methodology for systems with singular matrices has been used, and an averaging treatment has also been applied to derive the stochastic component of the response. Overall, the herein proposed methodology can be construed as a generalization of a recently proposed framework for deriving the response of systems subject to combined stochastic and deterministic excitations (Spanos et al. [2019]), to the case of systems with singular parameter matrices. Potential applications of the method can be found, indicatively, in modeling the dynamics of slender structures as well as in the field of vibration energy harvesting. The validity of the proposed approach has been demonstrated by pertinent numerical examples. Specifically, a 3-DOF and a 2-DOF nonlinear systems with nonlinearities of different kind and magnitudes have been considered. The obtained results have been compared and found in complete agreement with corresponding results derived by applying the standard approach in Spanos et al. [2019].

5 Data Availability Statement

All data, models, or code that support the findings of this study are available from the corresponding author upon reasonable request.

6 Acknowledgments

The authors gratefully acknowledge the support and funding from the German Research Foundation under Grant No. BE 2570/7-1 and MI 2459/1-1, and from the European Union's Horizon 2020 RISE 2016 programme under the grant agreement No 730888.

7 APPENDIX I. Elements of the theory of Moore-Penrose matrix inverses

In this appendix, a concise presentation of the fundamental results of the Moore-Penrose (M-P) generalized matrix inverses theory is presented for completeness. The interested reader is directed to Campbell and Meyer [2009] and Ben-Israel and Greville [2003] for a detailed presentation.

The mathematical problem that gave rise to the generalized matrix inverses theory is related to the solution of the algebraic system of equations

$$\mathbf{A}\mathbf{x} = \mathbf{b}. \tag{59}$$

In the general case, $\mathbf{A}$ in Eq. (59) denotes a rectangular $m \times n$ matrix and $\mathbf{x}, \mathbf{b}$ correspond, respectively, to n- and m-dimensional vectors. However, it is noted that the ensuing results also hold for the case of square, but singular matrix $\mathbf{A}$. Taking into account that the general solution to the problem in Eq. (59) is not possible due to the nature of matrix $\mathbf{A}$, and also considering that such problems are often encountered in theoretical as well as in applied science, the concept of a "partial inverse" of matrix $\mathbf{A}$ was introduced (Campbell and Meyer [2009]).

Definition 1. Given a matrix $\mathbf{A} \in \mathbb{C}^{m\times n}$, there is a uniquely defined matrix $\mathbf{A}^+ \in \mathbb{C}^{n\times m}$ such that:
(i) $\mathbf{A}\mathbf{A}^+\mathbf{A} = \mathbf{A}$, (ii) $\mathbf{A}^+\mathbf{A}\mathbf{A}^+ = \mathbf{A}^+$, (iii) $(\mathbf{A}\mathbf{A}^+)^* = \mathbf{A}\mathbf{A}^+$, (iv) $(\mathbf{A}^+\mathbf{A})^* = \mathbf{A}^+\mathbf{A}$.

Matrix $\mathbf{A}^+$ in Definition 1 is the so-called M-P inverse of $\mathbf{A}$. In general, when $\mathbf{A}$ is invertible, $\mathbf{A}^+$ coincides with the regular inverse $\mathbf{A}^{-1}$. Considering the solution of the algebraic system in Eq. (59), the M-P inverse holds an exceptional place among the family of generalized inverses, since it leads to the family of solutions

$$\mathbf{x} = \mathbf{A}^+\mathbf{b} + (\mathbf{I}_n - \mathbf{A}^+\mathbf{A})\mathbf{y}, \tag{60}$$

where $\mathbf{I}_n$ is the identity $n \times n$ matrix and $\mathbf{y}$ accounts for an arbitrary n-dimensional vector (Campbell and Meyer [2009]; Ben-Israel and Greville [2003]).

References

John Brian Roberts and Pol D Spanos. *Random vibration and statistical linearization*. Courier Corporation, 2003.

Jie Li and Jianbing Chen. *Stochastic dynamics of structures*. John Wiley & Sons, 2009.

Ioannis Petromichelakis and Ioannis A Kougioumtzoglou. Addressing the curse of dimensionality in stochastic dynamics: a wiener path integral variational formulation with free boundaries. *Proceedings of the Royal Society A*, 476 (2243):20200385, 2020.

Ioannis A Kougioumtzoglou, Ioannis Petromichelakis, and Apostolos F Psaros. Sparse representations and compressive sampling approaches in engineering mechanics: A review of theoretical concepts and diverse applications. *Probabilistic Engineering Mechanics*, 61:103082, 2020.

Firdaus E Udwadia and Robert E Kalaba. A new perspective on constrained motion. *Proceedings: Mathematical and Physical Sciences*, pages 407–410, 1992.

F.E Udwadia and R.E. Kalaba. Explicit equations of motion for mechanical systems with nonideal constraints. *Journal of Applied Mechanics*, 68(3):462–467, 2001.

F.E. Udwadia and P. Phohomsiri. Explicit equations of motion for constrained mechanical systems with singular mass matrices and applications to multi-body dynamics. *Proceedings of the Royal Society A: Mathematical, Physical and Engineering Sciences*, 462(2071):2097–2117, 2006.

J.H. Critchley and K.S. Anderson. A generalized recursive coordinate reduction method for multibody system dynamics. *International Journal for Multiscale Computational Engineering*, 1(2&3), 2003.

R. Featherstone. *Robot dynamics algorithms*. Springer Science & Business Media New York USA, 1984.

Aaron Schutte and Firdaus Udwadia. New approach to the modeling of complex multibody dynamical systems. *Journal of Applied Mechanics*, 78(2), 2011.

Domenico de Falco, E Pennestrì, and L Vita. The udwadia-kalaba formulation: A report on its numerical efficiency in multibody dynamics simulations and on its teaching effectiveness. *Multibody Dynamics*, 2005:21–24, 2005.

Carmine Maria Pappalardo and Domenico Guida. A comparative study of the principal methods for the analytical formulation and the numerical solution of the equations of motion of rigid multibody systems. *Archive of Applied Mechanics*, 88(12):2153–2177, 2018a.

Carmine M Pappalardo and Domenico Guida. On the lagrange multipliers of the intrinsic constraint equations of rigid multibody mechanical systems. *Archive of Applied Mechanics*, 88(3):419–451, 2018b.

F.E. Udwadia and T. Wanichanon. On general nonlinear constrained mechanical systems. *Numer. Algebra Control Optim*, 3(3):425–443, 2013.

A. Pirrotta, I.A. Kougioumtzoglou, and A.A. Pantelous. Stochastic response determination of structural systems modeled via dependent coordinates: a frequency domain treatment based on generalized modal analysis. *Meccanica*, 54(9): 1421–1431, 2019.

Vasileios C Fragkoulis, Ioannis A Kougioumtzoglou, and Athanasios A Pantelous. Linear random vibration of structural systems with singular matrices. *Journal of Engineering Mechanics*, 142(2):04015081, 2016a.

Vasileios C Fragkoulis, Ioannis A Kougioumtzoglou, and Athanasios A Pantelous. Statistical linearization of nonlinear structural systems with singular matrices. *Journal of Engineering Mechanics*, 142(9):04016063, 2016b.

IA Kougioumtzoglou, VC Fragkoulis, AA Pantelous, and A Pirrotta. Random vibration of linear and nonlinear structural systems with singular matrices: A frequency domain approach. *Journal of Sound and Vibration*, 404:84–101, 2017.

GD Pasparakis, VC Fragkoulis, and Michael Beer. Harmonic wavelets based response evolutionary power spectrum determination of linear and nonlinear structural systems with singular matrices. *Mechanical Systems and Signal Processing*, 149:107203, 2021.

A. Pirrotta, I. A. Kougioumtzoglou, A. Di Matteo, V. C. Fragkoulis, A. A. Pantelous, and C. Adam. Deterministic and random vibration of linear systems

with singular parameter matrices and fractional derivative terms. *Journal of engineering mechanics*, DOI: 10.1061/(ASCE)EM.1943-7889.0001937, 2021.

VC Fragkoulis, IA Kougioumtzoglou, AA Pantelous, and A Pirrotta. Higher order matrix differential equations with singular coefficient matrices. In *AIP Conference Proceedings*, volume 1648, page 340002. AIP Publishing LLC, 2015.

Athanasios A Pantelous and Antonina Pirrotta. Modal analysis of multi-degrees-of-freedom systems with singular matrices: Analytical dynamics approach. *Journal of Engineering Mechanics*, 143(6):06017005, 2017.

AG Davenport. The response of slender structures to wind. In *Wind Climate in Cities*, pages 209–239. Springer, 1995.

Rodolfo K Tessari, Henrique M Kroetz, and André T Beck. Performance-based design of steel towers subject to wind action. *Engineering Structures*, 143: 549–557, 2017.

Wen Cai and Ryan L Harne. Characterization of challenges in asymmetric nonlinear vibration energy harvesters subjected to realistic excitation. *Journal of Sound and Vibration*, page 115460, 2020.

Yin Jen Lee, Yi Qi, Guangya Zhou, and Kim Boon Lua. Vortex-induced vibration wind energy harvesting by piezoelectric mems device in formation. *Scientific reports*, 9(1):1–11, 2019.

Pol D Spanos, Ying Zhang, and Fan Kong. Formulation of statistical linearization for mdof systems subject to combined periodic and stochastic excitations. *Journal of Applied Mechanics*, 86(10), 2019.

Ronald E Mickens. *Truly nonlinear oscillations: harmonic balance, parameter expansions, iteration, and averaging methods*. World Scientific, 2010.

Malte Krack and Johann Gross. *Harmonic balance for nonlinear vibration problems*. Springer, 2019.

George Lindfield and John Penny. *Numerical methods: using MATLAB*. Academic Press, 2018.

Adi Ben-Israel and Thomas NE Greville. *Generalized inverses: theory and applications*, volume 15. Springer Science & Business Media, 2003.

Stephen L Campbell and Carl D Meyer. *Generalized inverses of linear transformations*. SIAM, 2009.

Leslaw Socha. *Linearization methods for stochastic dynamic systems*, volume 730. Springer Science & Business Media, 2007.

Pol D Spanos and Georgios I Evangelatos. Response of a non-linear system with restoring forces governed by fractional derivatives—time domain simulation and statistical linearization solution. *Soil Dynamics and Earthquake Engineering*, 30(9):811–821, 2010.

P.D. Spanos and I.A. Kougioumtzoglou. Harmonic wavelets based statistical linearization for response evolutionary power spectrum determination. *Probabilistic Engineering Mechanics*, 27(1):57–68, 2012.

VC Fragkoulis, IA Kougioumtzoglou, AA Pantelous, and M Beer. Non-stationary response statistics of nonlinear oscillators with fractional derivative elements under evolutionary stochastic excitation. *Nonlinear Dynamics*, 97(4):2291–2303, 2019.

Ioannis P Mitseas and Michael Beer. Modal decomposition method for response spectrum based analysis of nonlinear and non-classically damped systems. *Mechanical Systems and Signal Processing*, 131:469–485, 2019.

A Chatterjee. Harmonic balance based averaging: approximate realizations of an asymptotic technique. *Nonlinear Dynamics*, 32(4):323–343, 2003.

Fan Kong and Pol D Spanos. Stochastic response of hysteresis system under combined periodic and stochastic excitation via the statistical linearization method. *Journal of Applied Mechanics*, pages 1–12, 2021.

ND Anh and NN Hieu. The duffing oscillator under combined periodic and random excitations. *Probabilistic Engineering Mechanics*, 30:27–36, 2012.

Rong Haiwu, Xu Wei, Meng Guang, and Fang Tong. Response of a duffing oscillator to combined deterministic harmonic and random excitation, 2001.

Lincong Chen and Weiqiu Zhu. Stochastic jump and bifurcation of duffing oscillator with fractional derivative damping under combined harmonic and white noise excitations. *International Journal of Non-Linear Mechanics*, 46(10): 1324–1329, 2011.

Benjamin Megerle, Timothy Stephen Rice, Ivan McBean, and Peter Ott. Numerical and experimental investigation of the aerodynamic excitation of a model low-pressure steam turbine stage operating under low volume flow. *Journal of engineering for gas turbines and power*, 135(1), 2013.

Pol D Spanos and Giovanni Malara. Nonlinear vibrations of beams and plates with fractional derivative elements subject to combined harmonic and random excitations. *Probabilistic Engineering Mechanics*, 59:103043, 2020.

Ronald Mickens. Comments on the method of harmonic balance. *Journal of Sound and Vibration*, 94(3):456–460, 1984.

Chihiro Hayashi. *Nonlinear oscillations in physical systems*. Princeton University Press, 2014.

C. D. Meyer. *Matrix analysis and applied linear algebra*, volume 71. Siam, 2000.

Malcolm C Smith. Synthesis of mechanical networks: the inerter. *IEEE Transactions on automatic control*, 47(10):1648–1662, 2002.

Laurentiu Marian and Agathoklis Giaralis. Optimal design of a novel tuned mass-damper–inerter (tmdi) passive vibration control configuration for stochastically support-excited structural systems. *Probabilistic Engineering Mechanics*, 38: 156–164, 2014.