White Rose Research Online

eprints@whiterose.ac.uk
https://eprints.whiterose.ac.uk
Universities of Leeds, Sheffield and York

Deposited via The University of Sheffield.

White Rose Research Online URL for this paper:
https://eprints.whiterose.ac.uk/id/eprint/153385/

Version: Accepted Version

Article:
Selivanov, A. and Fridman, E. (2016) Distributed event-triggered control of diffusion semilinear PDEs. Automatica, 68. pp. 344-351. ISSN: 0005-1098

https://doi.org/10.1016/j.automatica.2016.02.006

Article available under the terms of the CC-BY-NC-ND licence
(https://creativecommons.org/licenses/by-nc-nd/4.0/).

Reuse
This article is distributed under the terms of the Creative Commons Attribution-NonCommercial-NoDerivs (CC BY-NC-ND) licence. This licence only allows you to download this work and share it with others as long as you credit the authors, but you can’t change the article in any way or use it commercially. More information and the full terms of the licence here: https://creativecommons.org/licenses/

Takedown
If you consider content in White Rose Research Online to be in breach of UK law, please notify us by emailing eprints@whiterose.ac.uk including the URL of the record and the reason for the withdrawal request.

UNIVERSITY OF LEEDS
University of Sheffield
UNIVERSITY of York

Distributed event-triggered control of diffusion semilinear PDEs

Anton Selivanov, Emilia Fridman

School of Electrical Engineering, Tel Aviv University, Israel

Abstract

We introduce distributed event-triggered networked control of parabolic systems governed by semilinear diffusion PDEs. Sampled in time spatially distributed (either point or averaged) measurements are transmitted through a communication network to the controller only if a triggering condition is violated. We take into account quantization of the transmitted measurements and network-induced delays that are allowed to be larger than sampling intervals. We show that decentralized event-triggering mechanism can significantly reduce amount of transmitted measurements while preserving the system performance.

Key words: Networked control systems; distributed parameter systems; event-triggered control; systems with time-delays.

1 Introduction

Networked control systems, that are comprised of sensors, actuators, and controllers connected through a network, is a very hot topic due to great advantages they bring, such as long distance control, low cost, ease of reconfiguration, etc [2,21]. One of the challenges in such systems is that only sampled in time measurements can be transmitted through a communication network. The discrete-time approach to sampled-data control has been developed in [27,35], model decomposition techniques have been extensively used for sampled-data control in, e.g., [16,40,41], for parabolic systems mobile collocated sensors and actuators were considered in [6]. The above methods are not applicable to the performance (exponential decay rate) analysis of the closed-loop infinite-dimensional systems.

A given decay rate of convergence has been guaranteed in [11], where sampled-data stabilization under the point measurements has been studied, and in [10,3], where network-based H_∞ control and filtering under the averaged measurements have been considered. Conditions derived in the latter works can lead to small sampling time intervals, resulting in a high workload of the communication network.

To reduce the network workload an event-triggering mechanism (ETM) can be used. While there exists an extensive literature on event-triggered networked control of finite dimensional systems (see [34,37,28,22,7,15,42,31]), there are few works on event-triggered control of diffusion PDEs, which are potentially of great interest in a long distance control of chemical reactors [33] or air polluted areas [24,4]. Event-triggered control of distributed parameter systems was started in [39] via model reduction approach leading to *local* results concerning *practical* stability where no decay rate can be guaranteed for the initial system. Moreover, this approach seems to be inapplicable to the systems with spatially-dependent diffusion coefficients.

In the present work we introduce distributed event-triggered control of diffusion semilinear PDEs under the point measurements (where several sensors measure the output in certain spatial points) and under the averaged measurements (where sensors measure the average output on different space regions). In terms of LMIs we give *global exponential stability* conditions and show that the network workload can be significantly reduced by means of decentralized ETM both for point and averaged measurements while a decay rate of convergence is preserved. This allows to save communication and energy resources. In our setup in each sensor node

⋆ Some preliminary results of the paper have been presented at the 1st Conference on Modelling, Identification and Control of Nonlinear System 2015 [32]. This work is supported by Israel Science Foundation (grant No. 1128/14). The results of Section 3 were obtained in IPME RAS under support of RSF (grant 14-29-00142).

Email addresses: antonselivanov@gmail.com (Anton Selivanov), emilia@eng.tau.ac.il (Emilia Fridman).

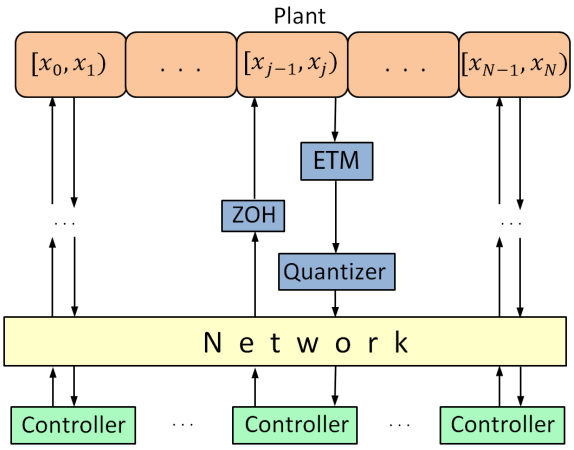

Fig. 1. System representation

it is locally decided weather to send newly sampled measurement or not using local event-triggering rule. We take into account quantization of the transmitted measurements and network-induced delays that are allowed to be larger than sampling intervals. Note that there are two main approaches to control of PDEs. The first approach treats control problems in abstract (Banach/Hilbert) spaces with some conclusions for the specific systems [5,6,27]. The second approach, which we develop in the present paper, deals with specific PDEs.

Notations: $P > 0$ denotes that P is a symmetric positive-definite matrix, symbol $*$ stands for the symmetric terms, $\mathbb{Z}$ denotes the integer numbers, $\mathbb{N}_0$ – nonnegative integers, $\mathcal{C}^1$ is a set of smooth functions, $\mathcal{H}^1(0,l)$ is Sobolev space of absolutely continuous functions $z\colon [0,l] \to \mathbb{R}^n$ with the square integrable z_x, $\mathbf{1}_n$ is $n \times n$ matrix that consists of ones, $\otimes$ denotes the Kronecker product.

2 Problem statement and the closed-loop model

We consider the system schematically presented in Fig. 1. Below we describe each block.

2.1 Plant: diffusion PDE

We consider semilinear diffusion PDE

$$\begin{aligned} z_t(x,t) &= \Delta_D z(x,t) - \beta z_x(x,t) + Az(x,t) \\ &+\phi(z(x,t),x,t) + B\textstyle\sum_{j=1}^N b_j(x)u_j(t), \end{aligned} \tag{1}$$

with $x \in [0,l]$, $t \geq 0$, $z(x,t) = [z^1(x,t), \ldots, z^n(x,t)]^T \in \mathbb{R}^n$, $u_j(t) \in \mathbb{R}^r$, constant matrices $A \in \mathbb{R}^{n\times n}$, $B \in \mathbb{R}^{n\times r}$, and a matrix of convection coefficients $\beta \in \mathbb{R}^{n\times n}$. The diffusion term is given by

$$\Delta_D z(x,t) = \left[\frac{\partial}{\partial x}(d_1(x)z_x^1(x,t)), \ldots, \frac{\partial}{\partial x}(d_n(x)z_x^n(x,t))\right]^T$$

with $d_i(x) \in \mathcal{C}^1$ such that $0 < d_i^0 \leq d_i(x)$ for $x \in [0,l]$, $i = 1,\ldots,n$. Following [3] we assume that for some positive definite $Q \in \mathbb{R}^{n\times n}$ the function $\phi \in \mathcal{C}^1$ for $\forall z \in \mathbb{R}^n, x \in [0,l], t \geq 0$ satisfies

$$\phi^T(z,x,t)\phi(z,x,t) \leq z^T Q z. \tag{2}$$

Let the points $0 = x_0 < x_1 < \ldots < x_N = l$ divide $[0,l]$ into N subdomains (subintervals)

$$\Omega_j = [x_{j-1}, x_j), \quad x_j - x_{j-1} = \Delta_j \leq \Delta.$$

As in [11,10] The control inputs $u_j(t)$ enter (1) through the shape functions

$$b_j(x) = \begin{cases} 1, & x \in \Omega_j, \\ 0, & \text{otherwise}, \end{cases} \qquad j = 1,\ldots,N.$$

Such control appears, e.g., in the problem of compressor rotating stall with air injection actuator [18], where $z(x,t)$ denotes the axial flow through the compressor.

We consider (1) under the Dirichlet

$$z(0,t) = z(l,t) = 0, \tag{3}$$

Neumann

$$z_x(0,t) = z_x(l,t) = 0, \tag{4}$$

or mixed boundary conditions

$$z_x(0,t) = \Gamma z(0,t), \quad z(l,t) = 0 \tag{5}$$

with $\Gamma = \operatorname{diag}\{\gamma_1,\ldots,\gamma_n\} \geq 0$.

The open-loop system (1) (with $u_j(t) \equiv 0$) under the above boundary conditions may become unstable if $\|Q\|$ in (2) is big enough (see [5] for $\phi(z,x,t) = \phi_M z$).

2.2 Sampled in time measurements with ETM

Assume that in each subdomain Ω_j sensors provide discrete-time point or averaged measurements of the output $Cz(x,t)$, where $C \in \mathbb{R}^{m\times n}$. In Section 3 we consider synchronized variable sampling instants

$$0 = s_0 < s_1 < \ldots, \quad \lim_{k\to\infty} s_k = \infty,$$

where $0 < h_{\min} \leq s_{k+1} - s_k \leq h$, with point measurements

$$y_{j,k} = Cz(\bar{x}_j, s_k), \quad \bar{x}_j = \frac{x_{j-1} + x_j}{2}. \tag{6}$$

The assumption of the positive lower bound $h_{\min}$ on the sampling time intervals eliminates the possibility of the Zeno behavior [1].

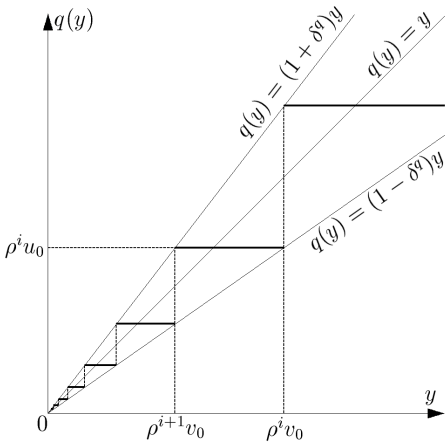

Fig. 2. Logarithmic quantizer

In Section 4 we consider the asynchronous (jth dependent) variable sampling instants

$$0 = s_{j,0} < s_{j,1} < \dots, \quad \lim_{k\to\infty} s_{j,k} = \infty, \; j = 1, \dots, N,$$

where $0 < h_{\min} \le s_{j,k+1} - s_{j,k} \le h$, with spatially averaged measurements

$$y_{j,k} = \tfrac{1}{\Delta_j} \int_{x_{j-1}}^{x_j} Cz(x, s_{j,k})\, dx. \tag{7}$$

Let $\hat{y}_{j,k}$ be the last sent measurement from the domain Ω_j at time instant $s_{j,k}$. Similarly to [34,42] the newly sampled measurement $y_{j,k}$ is *not transmitted if*

$$(\hat{y}_{j,k-1} - y_{j,k})^T\, \Omega\, (\hat{y}_{j,k-1} - y_{j,k}) < \varepsilon\, y_{j,k}^T \Omega y_{j,k}, \tag{8}$$

where $\varepsilon > 0$, $\Omega \in \mathbb{R}^{m\times m}$, $\Omega \ge 0$. Therefore,

$$\hat{y}_{j,k} = \begin{cases} \hat{y}_{j,k-1}, & \text{if (8) is valid,} \\ y_{j,k}, & \text{if (8) is not valid,} \end{cases} \tag{9}$$

where $j = 1, \dots, N$, $k \in \mathbb{N}_0$, $\hat{y}_{j,-1} = 0$.

2.3 Networked controller and the closed-loop system

Following [15] we assume that quantized values of the transmitted measurements $\hat{y}_{j,k}$ are available on the controller side. We consider a *logarithmic quantizer* [8]: choosing some $\rho \in (0,1)$ and $u_0 > 0$, define $v_0 = (1+\rho)u_0/(2\rho)$, $\delta_q = (1-\rho)/(1+\rho)$. Then a logarithmic quantizer with a density ρ is a mapping $q\colon \mathbb{R} \to \mathcal{U} = \{\pm\rho^i u_0 \mid i \in \mathbb{Z}\} \cup \{0\}$ defined by

$$q(y) = \begin{cases} \rho^i u_0, & \rho^{i+1}v_0 < y \le \rho^i v_0, \\ 0, & y = 0, \\ -q(-y), & y < 0. \end{cases}$$

For a vector $y = (y^1, \dots, y^m)^T \in \mathbb{R}^m$ we define $q(y) = (q_1(y^1), \dots, q_m(y^m))^T$, where q_i are scalar logarithmic quantizers with densities ρ_i.

The logarithmic quantizer implements a simple idea: to stabilize the system one should reduce quantization error near the origin by increasing the density of the quantization levels, while far from the origin quantization levels can be sparse (see Fig. 2). The value of δ_q corresponds to the maximum relative quantization error.

If (8) is not valid, the quantized measurement $q(y_{j,k}) = q(\hat{y}_{j,k})$ from the jth subdomain is transmitted through the network to the controller, and the resulting static output feedback $u_j = -Kq(\hat{y}_{j,k})$ with some constant gain $K \in \mathbb{R}^{r\times m}$ is further transmitted to the zero-order hold (ZOH).

Denote by $\eta_{j,k}$ the overall time-varying network-induced delay from the sensors to ZOH and define $t_{j,k} = s_{j,k} + \eta_{j,k}$. We assume that $\eta_{j,k} \le MAD$ (Maximum Allowable Delay) and allow it to be larger than the sampling intervals $s_{j,k+1} - s_{j,k}$ provided $t_{j,k} \le t_{j,k+1}$. Thus, if the measurement has been sent at sampling time instant $s_{j,k}$, then $t_{j,k}$ is the updating time of the ZOH. The resulting control law is given by

$$u_j(t) = -Kq(\hat{y}_{j,k}), \; t \in [t_{j,k}, t_{j,k+1}), \tag{10}$$

where $K \in \mathbb{R}^{r\times m}$, $k \in \mathbb{N}_0$, $j = 1, \dots, N$.

Applying the time-delay approach [12], [14] denote

$$\tau_j(t) = t - s_{j,k}, \quad t_{j,k} \le t \le t_{j,k+1}.$$

Then $\tau_j(t) \le h + MAD \triangleq \tau_M$. For $j = 1, \dots, N$, $k \in \mathbb{N}_0$ define the following quantities

$$e_{j,k} = \hat{y}_{j,k} - y_{j,k}, \quad v_{j,k} = q(\hat{y}_{j,k}) - \hat{y}_{j,k}, \tag{11}$$

that can be interpreted as errors due to triggering and quantization, respectively. The value $e_{j,k}$ is defined following [26]. Note that $e_{j,k} = 0$ if $y_{j,k}$ has been sent. We rewrite the quantized measurements as

$$q(\hat{y}_{j,k}) = y_{j,k} + v_{j,k} + e_{j,k}. \tag{12}$$

Setting $u_j(t) \equiv 0$ for $t < t_{j,0}$, the closed-loop system (1), (10) can be rewritten as:

$$\begin{aligned} z_t(x,t) &= \Delta_D z(x,t) - \beta z_x(x,t) + \phi(z(x,t),x,t) \\ &\qquad + Az(x,t), \quad t \in [0, t_{j,0}), \\ z_t(x,t) &= \Delta_D z(x,t) - \beta z_x(x,t) + \phi(z(x,t),x,t) \\ &\quad + Az(x,t) - BK[y_{j,k} + v_{j,k} + e_{j,k}], \quad t \in [t_{j,k}, t_{j,k+1}), \end{aligned} \tag{13}$$

where $x \in [x_{j-1}, x_j)$, $k \in \mathbb{N}_0$, $j = 1, \dots N$.

The existence of a continuable for $t \geq 0$ strong solution (as defined in [36]) to the system (13) under the boundary conditions (3), (4), or (5) can be proved by arguments of [10] for any $z(\cdot,0) \in \mathcal{H}^1(0,l)$ satisfying the corresponding boundary conditions.

3 Event-triggered control: point measurements

In this section we consider synchronized distributed sensors, i.e. $s_{j,k} = s_k$, $\eta_{j,k} = \eta_k$, $t_{j,k} = t_k$, $\tau_j(t) = \tau(t)$ for $j = 1,\dots,N$. The case of asynchronous sampling is discussed in Remark 1. For $j = 1,\dots,N$, $k \in \mathbb{N}_0$ define

$$\sigma_k(x) = z(\bar{x}_j, s_k) - z(x, s_k), \quad x \in [x_{j-1}, x_j). \tag{14}$$

Then the closed-loop system (13) for $x \in [x_{j-1}, x_j)$, $t \in [t_k, t_{k+1})$ can be rewritten in the following form:

$$\begin{aligned} z_t(x,t) = &\Delta_D z(x,t) - \beta z_x(x,t) + \phi(z(x,t),x,t) + Az(x,t) \\ &- BKCz(x,t-\tau(t)) - BK\left[v_{j,k} + e_{j,k} + C\sigma_k(x)\right]. \end{aligned} \tag{15}$$

To study the stability of (15) we suggest the following Lyapunov-Krasovskii functional (that extends Lyapunov constructions of [3] and [11]):

$$V(t) = V_1(t) + V_2(t) + V_S(t) + V_R(t) + V_B(t), \tag{16}$$

where

$$\begin{aligned} &V_1(t) = \textstyle\int_0^l z^T(x,t)P_1 z(x,t)\,dx, \\ &V_2(t) = \textstyle\sum_{i=1}^n \int_0^l p_3^i d_i(x)(z_x^i(x,t))^2\,dx, \\ &V_S(t) = \textstyle\int_0^l \int_{t-\tau_M}^t e^{\delta(s-t)} z^T(x,s)Sz(x,s)\,ds\,dx, \\ &V_R(t) = \tau_M \textstyle\int_0^l \int_{-\tau_M}^0 \int_{t+\theta}^t e^{\delta(s-t)} z_s^T(x,s)Rz_s(x,s)dsd\theta dx, \\ &V_B(t) = b\textstyle\sum_{i=1}^n p_3^i d_i(0)\gamma_i(z^i(0,t))^2 \end{aligned}$$

with $P_1 > 0$, $p_3^i > 0$, $S > 0$, $R > 0$, $b = 0$ for (3), (4) and $b = 1$ for (5). Similar to [25] we set $z(x,t) \equiv z(x,0)$ for $t < 0$: this does not change the solution but allows to consider $V(t)$ for $t \in [t_0, \tau_M)$. In order to "compensate" in $\dot{V}$ the cross terms with $v_{j,k}$ and $e_{j,k}$ we apply S-procedure [38]. Namely, each component of $v_{j,k} = (v_{j,k}^1,\dots,v_{j,k}^m)^T$ satisfies the sector inequality (see Fig. 2 and, e.g., [13,43])

$$0 \leq \lambda_q^i \left(\delta_q^i \hat{y}_{j,k}^i - v_{j,k}^i\right)\left(v_{j,k}^i + \delta_q^i \hat{y}_{j,k}^i\right), \tag{17}$$

with $\lambda_q^i \geq 0$, $\delta_q^i = (1-\rho_i)/(1+\rho_i)$. Furthermore, triggering condition (8), (9) implies

$$\begin{aligned} 0 \leq \varepsilon[z(x,t-\tau(t)) + \sigma_k(x)]^T C^T \Omega C \times \\ [z(x,t-\tau(t)) + \sigma_k(x)] - e_{j,k}^T(t)\Omega e_{j,k}(t). \end{aligned} \tag{18}$$

By adding to $\dot{V}$ the inequalities (17) and (18) with $-\lambda_q^i (v_{j,k}^i)^2 \leq 0$ and $-e_{j,k}^T \Omega e_{j,k} \leq 0$ we will compensate the cross terms with $v_{j,k}$ and $e_{j,k}$. Following [11], to "compensate" the term $\sigma_k(x)$ in the stability analysis we will use *Halanay's inequality*:

Lemma 1 ([19]) *If $0 < \delta_1 < \delta$ and $\dot{V}(t) \leq -\delta V(t) + \delta_1 \sup_{-\tau_M \leq \theta \leq 0} V(t+\theta)$ for $t \geq t_0$ then*

$$V(t) \leq e^{-\alpha(t-t_0)} \sup_{-\tau_M \leq \theta \leq 0} V(t_0+\theta), \quad t \geq t_0,$$

where $\alpha > 0$ is a unique positive solution of

$$\alpha = \delta - \delta_1 e^{\alpha\tau_M}. \tag{19}$$

Theorem 1 *(i) Given positive constants $0 < \delta_1 < \delta$, τ_M, and $\rho_1,\dots,\rho_m$, let there exist positive definite $n \times n$ matrices P_1, $P_3 = \operatorname{diag}\{p_3^1,\dots,p_3^n\}$, R, S, $m \times m$ nonnegative matrices Ω, $\Lambda_q = \operatorname{diag}\{\lambda_q^1,\dots,\lambda_q^m\}$, $n \times n$ matrices $P_2 = \operatorname{diag}\{p_2^1,\dots,p_2^n\}$, G, and a scalar $\lambda_\phi \geq 0$ that satisfy the following linear matrix inequalities:*

$$\Xi \leq 0, \quad \left[\begin{smallmatrix} R & G \\ G^T & R \end{smallmatrix}\right] \geq 0, \tag{20}$$

where $\Xi = \{\Xi_{ij}\}$ is a symmetric matrix composed of the matrices

$$\begin{aligned} &\Xi_{11} = S - e^{-\delta\tau_M}R + P_2A + A^TP_2 + \lambda_\phi Q + \delta P_1, \\ &\Xi_{12} = P_1 - P_2 + A^TP_3, \quad \Xi_{13} = 0, \quad \Xi_{14} = e^{-\delta\tau_M}G^T, \\ &\Xi_{15} = e^{-\delta\tau_M}(R - G^T) - P_2BKC, \quad \Xi_{16} = P_2, \\ &\Xi_{17} = -P_2BKC,\ \Xi_{18} = \Xi_{19} = -P_2BK,\ \Xi_{22} = \tau_M^2 R - 2P_3, \\ &\Xi_{23} = -P_3\beta, \quad \Xi_{25} = \Xi_{27} = -P_3BKC, \\ &\Xi_{26} = P_3, \quad \Xi_{28} = \Xi_{29} = -P_3BK, \\ &\Xi_{33} = D_0(\delta P_3 - 2P_2), \quad \Xi_{44} = -e^{-\delta\tau_M}(S+R), \\ &\Xi_{45} = e^{-\delta\tau_M}(R-G), \quad \Xi_{57} = C^T\Lambda_q\Delta_q^2 C + \varepsilon C^T\Omega C, \\ &\Xi_{55} = -2e^{-\delta\tau_M}R + e^{-\delta\tau_M}[G+G^T] + C^T\Lambda_q\Delta_q^2 C \\ &+\varepsilon C^T\Omega C - \delta_1 P_1,\ \Xi_{59} = \Xi_{79} = C^T\Lambda_q\Delta_q^2,\ \Xi_{66} = -\lambda_\phi I_n, \\ &\Xi_{77} = \Xi_{57} - \delta_1 P_3 D_0 \pi^2 \Delta^{-2},\ \Xi_{88} = -\Lambda_q,\ \Xi_{99} = \Lambda_q\Delta_q^2 - \Omega, \end{aligned}$$

other blocks are zero matrices, $D_0 = \operatorname{diag}\{d_1^0,\dots,d_n^0\}$, $\Delta_q = \operatorname{diag}\{\delta_q^1,\dots,\delta_q^m\}$, $\delta_q^i = (1-\rho_i)/(1+\rho_i)$. Then a unique strong solution to the Dirichlet boundary value problem (3), (6), (8), (9), (13), initialized with $z(\cdot,0) \in \mathcal{H}^1(0,l)$ satisfying (3), for $t \geq t_0$ satisfies the inequality

$$\begin{aligned} &\int_0^l z^T(x,t)P_1 z(x,t)\,dx + \sum_{i=1}^n \int_0^l p_3^i d_i(x)(z_x^i(x,t))^2\,dx \\ &\leq e^{-\alpha(t-t_0)}\Bigg[\int_0^l z^T(x,t_0)[P_1 + \tau_M S]z(x,t_0)\,dx \\ &+\sum_{i=1}^n \int_0^l p_3^i d_i(x)(z_x^i(x,t_0))^2 dx + b\sum_{i=1}^n p_3^i d_i(0)\gamma_i(z^i(0,t_0))^2\Bigg] \end{aligned} \tag{21}$$

with $b = 0$, where α is a unique positive solution of (19).

(ii) If conditions of (i) are satisfied with $\Xi_{13} = -P_2\beta$ then a unique strong solution to the Neumann boundary value problem (4), (6), (8), (9), (13), *initialized with $z(\cdot, 0) \in \mathcal{H}^1(0, l)$ satisfying* (4), *for $t \geq t_0$ satisfies* (21) *with $b = 0$, where α is a unique positive solution of* (19).

(iii) If, in addition to the conditions of (i),

$$2(\delta P_3 - 2P_2)D_0\Gamma + P_2\beta + \beta^T P_2 \leq 0,$$

then a unique strong solution to the mixed boundary value problem (5), (6), (8), (9), (13), *initialized with $z(\cdot, 0) \in \mathcal{H}^1(0, l)$ satisfying* (5), *for $t \geq t_0$ satisfies* (21) *with $b = 1$, where α is a unique positive solution of* (19).

Proof. See Appendix A.

Remark 1 *In the case of asynchronous sampling one could define different measurement delays $\tau_j(t)$ for each spatial interval $[x_{j-1}, x_j)$. Then to use Halanay's lemma and obtain an estimate similar to* (A.10) *instead of $-\delta_1 \sup_{\theta\in[-\tau_M,0]} V(t + \theta)$ one could consider*

$$\begin{aligned}
&-N\delta_1 \sup_{\theta\in[-\tau_M,0]} V(t + \theta) \leq -\delta_1 \textstyle\sum_{j=1}^N V(t - \tau_j(t)) \\
&\leq -\delta_1 \textstyle\sum_{j=1}^N \int_{x_{j-1}}^{x_j} z^T(x, t - \tau_j(t))P_1 z(x, t - \tau_j(t))\, dx \\
&-\delta_1 \textstyle\sum_{j=1}^N \int_{x_{j-1}}^{x_j} \sum_{i=1}^n p_3^i d_i^0 [z_x^i(x, t - \tau_j(t))]^2\, dx.
\end{aligned}$$

This approach seems to be quite restrictive since the terms

$$\begin{aligned}
&-\int_{x_{l-1}}^{x_l} z^T(x, t - \tau_j(t))P_1 z(x, t - \tau_j(t)) \\
&\qquad -\int_{x_{l-1}}^{x_l} \sum_{i=1}^n p_3^i d_i^0 [z_x^i(x, t - \tau_j(t))]^2\, dx \leq 0
\end{aligned}$$

with $l \neq j$ are ignored.

Remark 2 *Instead of the decentralized triggering rule* (8) *one can think of a centralized ETM of the form*

$$\sum_{j=1}^N (\hat{y}_{j,k-1} - y_{j,k})^T \Omega (\hat{y}_{j,k-1} - y_{j,k}) \leq \varepsilon \sum_{j=1}^N y_{j,k}^T \Omega y_{j,k}, \tag{22}$$

where all the measurements $y_{j,k}$ are transmitted to ETM and if (22) *is violated all the measurements are quantized and transmitted to the controllers. In the case of uniform space samplings $\Delta_j = \Delta$ relation* (22) *implies* (A.8) *and, therefore, the results of Theorem 1 hold. However, as one will see in the example, decentralized ETM* (8) *(that is more realistic if the sensors are not close to each other) is more effective.*

4 Event-triggered control: averaged measurements

In this section we consider the decentralized control under averaged measurements (7), where Halanay's inequality is not used in the proof of stability. This allows to consider asynchronous measurements. For $j = 1, \ldots, N$, $k \in \mathbb{N}_0$ consider the quantities

$$\vartheta_j(t) = \frac{1}{\Delta_j} \int_{x_{j-1}}^{x_j} [z(x, s_{j,k}) - z(x, t)]\, dx, t \in [t_{j,k}, t_{j,k+1}),$$

$$\kappa(x, t) = \frac{1}{\Delta_j} \int_{x_{j-1}}^{x_j} [z(\zeta, t) - z(x, t)]\, d\zeta, \quad x \in [x_{j-1}, x_j), \quad t \in [t_{j,k}, t_{j,k+1}).$$

These quantities can be interpreted as errors due to time-delay and averaged measurements, respectively. We rewrite the quantized measurements for $x \in [x_{j-1}, x_j)$, $t \in [t_{j,k}, t_{j,k+1})$ as

$$q(\hat{y}_{j,k}) = v_{j,k} + e_{j,k} + C\vartheta_j(t) + C\kappa(x, t) + Cz(x, t). \tag{23}$$

Then the closed-loop system (13) for $x \in [x_{j-1}, x_j)$, $t \in [t_{j,k}, t_{j,k+1})$ can be rewritten in the following form

$$\begin{aligned}
z_t(x, t) =& \Delta_D z(x, t) - \beta z_x(x, t) + Az(x, t) \\
&+ \phi(z(x, t), x, t) - BKCz(x, t) \\
&- BK\left[v_{j,k} + Ce_{j,k} + C\vartheta_j(t) + C\kappa(x, t)\right].
\end{aligned} \tag{24}$$

To derive the stability conditions we use Lyapunov-Krasovskii functional (16). We will compensate the terms $v_{j,k}$, $e_{j,k}$ in $\dot{V}$ similar to Section 3. To compensate $\vartheta_j(t) = (\vartheta_j^1(t), \ldots, \vartheta_j^n(t))^T$ and $\kappa(x, t) = (\kappa_1(x, t), \ldots, \kappa_n(x, t))^T$ we will use the idea from [3]. Namely, Jensen's inequality implies

$$\begin{aligned}
&\int_{x_{j-1}}^{x_j} \left(z^i(x, s_{j,k}) - z^i(x, t)\right)^2 dx \geq \\
&\frac{1}{\Delta_j} \left(\int_{x_{j-1}}^{x_j} \left[z^i(x, s_{j,k}) - z^i(x, t)\right] dx \right)^2 = \Delta_j (\vartheta_j^i(t))^2,
\end{aligned}$$

therefore, for any $\Lambda_\vartheta = \operatorname{diag}\left\{\lambda_\vartheta^1, \ldots, \lambda_\vartheta^n\right\} \geq 0$

$$\begin{aligned}
0 \leq \sum_{j=1}^N \int_{x_{j-1}}^{x_j} \Bigg(&[z(x, t - \tau_j(t)) - z(x, t)]^T \Lambda_\vartheta \times \\
&[z(x, t - \tau_j(t)) - z(x, t)] - \vartheta_j(t)^T \Lambda_\vartheta \vartheta_j(t) \Bigg) dx.
\end{aligned} \tag{25}$$

Since $\int_{x_{j-1}}^{x_j} \kappa_i(x, t)\, dx = 0$, from Poincare's inequality [30] we obtain

$$\int_{x_{j-1}}^{x_j} \kappa_i^2(x, t)\, dx \leq \frac{\Delta_j^2}{\pi^2} \int_{x_{j-1}}^{x_j} (z_x^i(x, t))^2\, dx.$$

Therefore, for any $\Lambda_\kappa = \mathrm{diag}\left\{\lambda_\kappa^1, \ldots, \lambda_\kappa^n\right\} \geq 0$

$$0 \leq \sum_{j=1}^{N} \int_{x_{j-1}}^{x_j} [\tfrac{\Delta^2}{\pi^2} z_x(x,t)^T \Lambda_\kappa z_x(x,t) - \kappa(x,t)^T \Lambda_\kappa \kappa(x,t)]\, dx, \tag{26}$$

where $\Delta = \max_j \Delta_j$. Nonnegative quadratic forms (25) and (26) contain the terms $-\vartheta_j(t)^T \Lambda_\vartheta \vartheta_j(t) \leq 0$ and $-\kappa(x,t)^T \Lambda_\kappa \kappa(x,t) \leq 0$ that will compensate the cross terms with $\vartheta_j(t)$ and $\kappa(x,t)$.

Theorem 2 *(i) Given positive constants $\alpha > 0, \tau_M > 0$, and $\rho_1, \ldots, \rho_m$, let there exist positive definite $n \times n$ matrices P_1, $P_3 = \mathrm{diag}\left\{p_3^1, \ldots, p_3^n\right\}$, R, S, $m \times m$ nonnegative matrices Ω, $\Lambda_q = \mathrm{diag}\left\{\lambda_q^1, \ldots, \lambda_q^m\right\}$, $n \times n$ nonnegative matrices $\Lambda_\vartheta = \mathrm{diag}\left\{\lambda_\vartheta^1, \ldots, \lambda_\vartheta^n\right\}$, $\Lambda_\kappa = \mathrm{diag}\left\{\lambda_\kappa^1, \ldots, \lambda_\kappa^n\right\}$, $n \times n$ matrices $P_2 = \mathrm{diag}\left\{p_2^1, \ldots, p_2^n\right\}$, G, and a scalar $\lambda_\phi \geq 0$ that satisfy the following linear matrix inequalities:*

$$\Psi \leq 0, \quad \left[\begin{smallmatrix} R & G \\ G^T & R \end{smallmatrix}\right] \geq 0, \tag{27}$$

where $\Psi = \{\Psi_{ij}\}$ is a symmetric matrix composed of the matrices

$$\begin{aligned}
&\Psi_{11} = S - e^{-\alpha\tau_M} R + P_2 A + A^T P_2 - P_2 BKC + \alpha P_1 \\
&- (P_2 BKC)^T + \lambda_\phi Q + \Lambda_\vartheta + C^T \Lambda_q \Delta_q^2 C + \varepsilon C^T \Omega C, \\
&\Psi_{12} = P_1 - P_2 + A^T P_3 - (P_3 BKC)^T, \quad \Psi_{13} = 0, \\
&\Psi_{14} = e^{-\alpha\tau_M} G^T,\ \Psi_{15} = e^{-\alpha\tau_M}(R - G^T) - \Lambda_\vartheta,\ \Psi_{16} = P_2, \\
&\Psi_{19} = -P_2 BK,\ \Psi_{1,10} = -P_2 BK + C^T \Lambda_q \Delta_q^2, \\
&\Psi_{17} = \Psi_{18} = -P_2 BKC + C^T \Lambda_q \Delta_q^2 C + \varepsilon C^T \Omega C, \\
&\Psi_{29} = \Psi_{2,10} = -P_3 BK, \quad \Psi_{27} = \Psi_{28} = -P_3 BKC, \\
&\Psi_{22} = \tau_M^2 R - 2P_3, \quad \Psi_{23} = -P_3\beta, \quad \Psi_{26} = P_3, \\
&\Psi_{33} = D_0(\alpha P_3 - 2P_2) + \Delta^2 \pi^{-2} \Lambda_\kappa,\ \Psi_{10,10} = \Lambda_q \Delta_q^2 - \Omega, \\
&\Psi_{44} = -e^{-\alpha\tau_M}(S + R), \quad \Psi_{45} = e^{-\alpha\tau_M}(R - G), \\
&\Psi_{55} = -2e^{-\alpha\tau_M} R + e^{-\alpha\tau_M}[G + G^T] + \Lambda_\vartheta, \\
&\Psi_{66} = -\lambda_\phi I_n, \quad \Psi_{77} = -\Lambda_\vartheta + C^T \Lambda_q \Delta_q^2 C + \varepsilon C^T \Omega C, \\
&\Psi_{78} = C^T \Lambda_q \Delta_q^2 C + \varepsilon C^T \Omega C,\ \Psi_{7,10} = \Psi_{8,10} = C^T \Lambda_q \Delta_q^2, \\
&\Psi_{88} = -\Lambda_\kappa + C^T \Lambda_q \Delta_q^2 C + \varepsilon C^T \Omega C, \quad \Psi_{99} = -\Lambda_q,
\end{aligned}$$

other blocks are zero matrices, $D_0 = \mathrm{diag}\left\{d_1^0, \ldots, d_n^0\right\}$, $\Delta_q = \mathrm{diag}\left\{\delta_q^1, \ldots, \delta_q^m\right\}$, $\delta_q^i = (1 - \rho_i)/(1 + \rho_i)$. Then a unique strong solution to the Dirichlet boundary value problem (3), (7), (8), (9), (13), initialized with $z(\cdot, 0) \in \mathcal{H}^1(0, l)$ satisfying (3), for $t \geq \max_j t_{j,0} = t_0$ satisfies the inequality (21) with $b = 0$.

(ii) If conditions of (i) are satisfied with $\Psi_{13} = -P_2\beta$ then a unique strong solution to the Neumann boundary value problem (4), (7), (8), (9), (13), initialized with $z(\cdot, 0) \in \mathcal{H}^1(0, l)$ satisfying (4), for $t \geq t_0$ satisfies the inequality (21) with $b = 0$.

Point meas. (6) \ T	1	2	3	4	5
No event-triggering	51	101	151	202	252
Centralized (22)	5	9	13	17	21
Decentralized (8)	4.6	8.2	12	15.5	20

Table 1
Sent measurements within $[0, T]$ with $MAD = 0$.

Point meas. (6) \ T	1	2	3	4	5
No event-triggering	60	119	178	237	296
Decentralized (8)	5.6	9.2	12.9	15.6	21.4

Table 2
Sent measurements within $[0, T]$ with $MAD = 0.002$.

(iii) If in addition to the conditions of (i),

$$2(\alpha P_3 - 2P_2) D_0 \Gamma + P_2 \beta + \beta^T P_2 \leq 0,$$

then a unique strong solution to the mixed boundary value problem (5), (7), (8), (9), (13), initialized with $z(\cdot, 0) \in \mathcal{H}^1(0, l)$ satisfying (5), for $t \geq t_0$ satisfies (21) with $b = 1$.

Proof. See Appendix B.

5 Example: Chemical reactor

Consider the chemical reactor model from [3,33] governed by (1) under the mixed boundary conditions (5) with $n = 2$, $r = m = 1$, $l = 10$, $D_0 = \mathrm{diag}\{0.01, 0.005\}$, $\beta = \mathrm{diag}\{0.011, 1.1\}$, $K = 1$, $\Gamma = \mathrm{diag}\{6, 111\}$, $\phi = (\phi_1(z^1), 0)^T$, $Q = \mathrm{diag}\left\{10^{-4}, 0\right\}$, $u_0 = 1$, $\rho_i = \rho = 0.9$,

$$A = \begin{bmatrix} 0 & 0.01 \\ -0.45 & -0.2 \end{bmatrix}, \quad B = \begin{bmatrix} 1 \\ 1 \end{bmatrix}, \quad C = \begin{bmatrix} 1 & 0 \end{bmatrix}.$$

This model accounts for an activator temperature z^1 that undergoes reaction, advection, and diffusion, and for a fast inhibitor concentration z^2, which may be advected by the flow.

To compare point and averaged measurements we set $\varepsilon = 0$, $\alpha = 0.1968$, $N = 20$. Then Theorem 1 gives an upper bound $\tau_M = 0.009$, while Theorem 2 gives significantly larger $\tau_M = 0.347$. Hence, the averaged measurements allow larger delays, but at the cost of a bigger number of sensors that provide these measurements.

Now we consider event-triggering under the point measurements and uniform sampling $s_k = kh$, $k \in \mathbb{N}_0$. Choose $N = 25$, $\delta = 2$ and $\delta_1 = 0.9\,\delta$. For $\varepsilon = 0$ Theorem 1 gives $\tau_M = \tau_M^0 = 0.0199$ ($\alpha \approx 0.1931$). In this case each sensor transmits $\lfloor T/h \rfloor + 1$ measurements on the time interval $[0, T]$, where $\lfloor \cdot \rfloor$ is the largest integer not greater than the given number. For $\varepsilon = 0.09$ we find $\tau_M = \tau_M^\varepsilon = 0.0028$ ($\alpha \approx 0.1990$).

Aver. meas. (7)\ T	10	20	30	40	50
No event-triggering	16	31	46	61	77
Decentralized (8)	5.8	11	18.2	21.8	25.9

Table 3
Average amount of sent measurements within $[0, T]$.

In this case the average amount of sent measurements is obtained by numerical simulations with $z(x,0) = (\sin^2(\pi x/10), 3\sin^2(\pi x/10))^T$. For $\eta_k \equiv 0$ in Table 1 one can see the average amount of sent measurements by each sensor in case of the system without ETM, with ETM (22), and with decentralized ETM (8). Though $\tau_M^\varepsilon < \tau_M^0$, the amount of sent measurements is reduced by more than 90%. Note that the decentralized ETM (8) has a slight advantage over the centralized one (22). Now we set $MAD = 0.002$, $h = 8 \times 10^{-4}$. As one can see from Table 2 ETM allows to decrease the workload of the network by more than 90%. That is, *ETM allows to reduce significantly the workload of a networked control system while decay rate of convergence is preserved.*

To study the effect of event-triggering with averaged measurements we choose $N = 40$ and $\alpha = 0.3$. Theorem 2 gives $\varepsilon = 0$, $\tau_M = \tau_M^0 = 0.6568$ and $\varepsilon = 0.57$, $\tau_M = \tau_M^\varepsilon = 0.2859$. In Table 3 one can see the average amount of sent measurements by each sensor within the time interval $[0, T]$ for the system without ETM and with ETM (8), where $\eta_k \equiv 0$. The same improvement was obtained for a non-zero η_k. Therefore, *ETM allows to reduce the amount of sent measurements by more than* 60% *while decay rate of convergence is preserved.*

6 Conclusion

In this paper we have introduced distributed event triggered control of parabolic systems under point or spatially averaged discrete time measurements. Quantization of transmitted measurements, as well as network-induced delays have been taken into account. The example of chemical reactor illustrates the efficiency of the method: decentralized ETM significantly reduces amount of transmitted measurements while preserving the performance (exponential decay rate).

References

[1] A. D. Ames, P. Tabuada, and S. Sastry. On the Stability of Zeno Equilibria. In *Lecture Notes in Computer Science*, volume 3927, pages 34–48. Springer Berlin Heidelberg, 2006.

[2] P. J. Antsaklis and J. Baillieul. Guest Editorial Special Issue on Networked Control Systems. *IEEE Transactions on Automatic Control*, 49(9):1421–1423, 2004.

[3] N. Bar Am and E. Fridman. Network-based H_∞ filtering of parabolic systems. *Automatica*, 50(12):3139–3146, 2014.

[4] J. R. Court, M. A. Demetriou, and N. A. Gatsonis. Spatial gradient measurement through length scale estimation for the tracking of a gaseous source. In *American Control Conference*, pages 2984–2989, 2012.

[5] R. F. Curtain and H. Zwart. *An Introduction to Infinite-Dimensional Linear Systems Theory*, volume 21 of *Texts in Applied Mathematics*. New York: Springer, 1995.

[6] M. A. Demetriou. Guidance of mobile actuator-plus-sensor networks for improved control and estimation of distributed parameter systems. *IEEE Transactions on Automatic Control*, 55(7):1570–1584, 2010.

[7] D. V. Dimarogonas, E. Frazzoli, and K. H. Johansson. Distributed event-triggered control for multi-agent systems. *IEEE Transactions on Automatic Control*, 57(5):1291–1297, 2012.

[8] N. Elia and S. Mitter. Stabilization of linear systems with limited information. *IEEE Transactions on Automatic Control*, 46(9):1384–1400, 2001.

[9] E. Fridman. New Lyapunov–Krasovskii functionals for stability of linear retarded and neutral type systems. *Systems & Control Letters*, 43:309–319, 2001.

[10] E. Fridman and N. Bar Am. Sampled-data distributed H_∞ control of transport reaction systems. *SIAM Journal on Control and Optimization*, 51(2):1500–1527, 2013.

[11] E. Fridman and A. Blighovsky. Robust sampled-data control of a class of semilinear parabolic systems. *Automatica*, 48(5):826–836, 2012.

[12] E. Fridman, A. Seuret, and J.-P. Richard. Robust sampled-data stabilization of linear systems: an input delay approach. *Automatica*, 40(8):1441–1446, 2004.

[13] M. Fu and L. Xie. The sector bound approach to quantized feedback control. *IEEE Transactions on Automatic Control*, 50(11):1698–1711, 2005.

[14] H. Gao, T. Chen, and J. Lam. A new delay system approach to network-based control. *Automatica*, 44(1):39–52, 2008.

[15] E. Garcia and P. J. Antsaklis. Model-based event-triggered control for systems with quantization and time-varying network delays. *IEEE Transactions on Automatic Control*, 58(2):422–434, 2013.

[16] S. Ghantasala and N. H. El-Farra. Active fault-tolerant control of sampled- data nonlinear distributed parameter systems. *International Journal of Robust and Nonlinear Control*, 22:24–42, 2012.

[17] K. Gu, V. L. Kharitonov, and J. Chen. *Stability of Time-Delay Systems*. Birkhäuser, Boston, 2003.

[18] G. Hagen and I. Mezic. Spillover Stabilization in Finite-Dimensional Control and Observer Design for Dissipative Evolution Equations. *SIAM Journal on Control and Optimization*, 42(2):746–768, 2003.

[19] A. Halanay. *Differential Equations: Stability, Oscillations, Time Lags*. Academic Press, New York, 1966.

[20] G. Hardy, J. Littlewood, and G. Pólya. *Inequalities*. Cambridge University Press, 1952.

[21] J. Hespanha, P. Naghshtabrizi, and Y. Xu. A Survey of Recent Results in Networked Control Systems. *Proceedings of the IEEE*, 95(1), 2007.

[22] S. Hu and D. Yue. Event-triggered control design of linear networked systems with quantizations. *ISA Transactions*, 51(1):153–162, 2012.

[23] H. K. Khalil. *Nonlinear Systems*. Prentice Hall, 3rd edition, 2002.

[24] M. Koda and J. Seinfeld. Estimation of urban air pollution. *Automatica*, 14:583–595, 1978.

[25] K. Liu and E. Fridman. Delay-dependent methods and the first delay interval. *Systems & Control Letters*, 64:57–63, 2014.

[26] K. Liu, E. Fridman, and L. Hetel. Network-based Control via a Novel Analysis of Hybrid Systems with Time-varying Delays. In *51st IEEE Conference on Decision and Control*, pages 3886–3891, 2012.

[27] H. Logemann. Stabilization of well-posed infinite-dimensional systems by dynamic sampled-data feedback. *SIAM Journal on Control and Optimization*, 51(2):1203–1231, 2013.

[28] M. Mazo and P. Tabuada. Decentralized Event-Triggered Control Over Wireless Sensor/Actuator Networks. *IEEE Transactions on Automatic Control*, 56(10):2456–2461, 2011.

[29] P. Park, J. W. Ko, and C. Jeong. Reciprocally convex approach to stability of systems with time-varying delays. *Automatica*, 47(1):235–238, 2011.

[30] L. Payne and H. Weinberger. An optimal Poincaré inequality for convex domains. *Archive for Rational Mechanics and Analysis*, 5(1):286–292, 1960.

[31] C. Peng and T. C. Yang. Event-triggered communication and control co-design for networked control systems. *Automatica*, 49(5):1326–1332, 2013.

[32] A. Selivanov and E. Fridman. Distributed event-triggered control of transport-reaction systems. In *1st IFAC Conference on Modelling, Identification and Control of Nonlinear Systems*, pages 597–601, 2015.

[33] Y. Smagina and M. Sheintuch. Using Lyapunov's direct method for wave suppression in reactive systems. *Systems & Control Letters*, 55(7):566–572, 2006.

[34] P. Tabuada. Event-Triggered Real-Time Scheduling of Stabilizing Control Tasks. *IEEE Transactions on Automatic Control*, 52(9):1680–1685, 2007.

[35] Y. Tan, E. Trélat, Y. Chitour, and D. Nešić. Dynamic practical stabilization of sampled-data linear distributed parameter systems. *48th IEEE Conference on Decision and Control*, pages 5508–5513, 2009.

[36] M. Tucsnak and G. Weiss. *Observation and Control for Operator Semigroups*. Birkhäuser Basel, 2009.

[37] X. Wang and M. Lemmon. Event-triggering in distributed networked control systems. *IEEE Transactions on Automatic Control*, 56(3):586–601, 2011.

[38] V. Yakubovic. S-procedure in nonlinear control theory. *Vestnik Leningrad Univ. Math.*, 4:73–93, 1977.

[39] Z. Yao and N. H. El-Farra. Resource-aware model predictive control of spatially distributed processes using event-triggered communication. In *52nd IEEE Conference on Decision and Control*, pages 3726–3731, 2013.

[40] Z. Yao and N. H. El-Farra. Data-Driven Actuator Fault Identification and Accommodation in Networked Control of Spatially-Distributed Systems. In *American Control Conference*, pages 1021–1026, 2014.

[41] Z. Yao and N. H. El-Farra. Networked Controller Design and Analysis for Uncertain Distributed Processes with Measurement and Actuation Error. In *53rd IEEE Conference on Decision and Control*, pages 5248–5253, 2014.

[42] D. Yue, E. Tian, and Q.-L. Han. A delay system method for designing event-triggered controllers of networked control systems. *IEEE Transactions on Automatic Control*, 58(2):475–481, 2013.

[43] B. Zhou, G.-R. Duan, and J. Lam. On the absolute stability approach to quantized feedback control. *Automatica*, 46(2):337–346, 2010.

A Proof of Theorem 1

Consider Lyapunov-Krasovskii functional (16). For $t \geq t_0$ we have

$$\begin{aligned}
\dot{V}_1 &= 2\int_0^l z^T(x,t)P_1 z_t(x,t)\,dx,\\
\dot{V}_2 &= 2\sum_{i=1}^n \int_0^l p_3^i d_i(x) z_x^i(x,t) z_{xt}^i(x,t)\,dx,\\
\dot{V}_S &= -\delta V_S + \int_0^l z^T(x,t)Sz(x,t)\,dx\\
&\quad -e^{-\delta\tau_M}\int_0^l z^T(x,t-\tau_M)Sz(x,t-\tau_M)\,dx,\\
\dot{V}_R &= -\delta V_R + \tau_M^2\int_0^l z_t^T(x,t)Rz_t(x,t)\,dx\\
&\quad -\tau_M\int_0^l\int_{t-\tau_M}^t e^{\delta(s-t)} z_s^T(x,s)Rz_s(x,s)\,ds\,dx,\\
\dot{V}_B &= 2b\sum_{i=1}^n p_3^i d_i(0)\gamma_i z^i(0,t) z_t^i(0,t).
\end{aligned}$$

The fact that z_{xt} in $\dot{V}_2$ is well-defined has been proved in [10, Remark A.1]. Jensen's inequality [17] yields

$$\begin{aligned}
&-\tau_M\int_0^l\int_{t-\tau_M}^t e^{\delta(s-t)} z_s^T(x,s)Rz_s(x,s)\,ds\,dx\\
&\leq -\tau_M e^{-\delta\tau_M}\int_0^l\Big\{\int_{t-\tau_M}^{t-\tau(t)} z_s^T(x,s)Rz_s(x,s)\,ds\\
&+\int_{t-\tau(t)}^t z_s^T(x,s)Rz_s(x,s)\,ds\Big\}\,dx\\
&\leq -e^{-\delta\tau_M}\int_0^l\Big\{\tfrac{\tau_M}{\tau_M-\tau(t)}\int_{t-\tau_M}^{t-\tau(t)} z_s^T(x,s)ds\,R\int_{t-\tau_M}^{t-\tau(t)} z_s(x,s)ds\\
&+\tfrac{\tau_M}{\tau(t)}\int_{t-\tau(t)}^t z_s^T(x,s)\,ds\,R\int_{t-\tau(t)}^t z_s(x,s)\,ds\Big\}\,dx\\
&\leq -e^{-\delta\tau_M}\int_0^l\Big\{\int_{t-\tau_M}^{t-\tau(t)} z_s^T(x,s)\,dsR\int_{t-\tau_M}^{t-\tau(t)} z_s(x,s)\,ds\\
&+\int_{t-\tau(t)}^t z_s^T(x,s)\,dsR\int_{t-\tau(t)}^t z_s(x,s)\,ds\\
&+2\int_{t-\tau_M}^{t-\tau(t)} z_s^T(x,s)\,ds\,G\int_{t-\tau(t)}^t z_s(x,s)\,ds\Big\}\,dx.
\end{aligned} \tag{A.1}$$

The last inequality in (A.1) is obtained by applying Theorem 1 from [29] with

$$\begin{aligned}
f_1 &= \int_{t-\tau_M}^{t-\tau(t)} z_s^T(x,s)\,ds\,R\int_{t-\tau_M}^{t-\tau(t)} z_s(x,s)\,ds,\\
f_2 &= \int_{t-\tau(t)}^t z_s^T(x,s)\,ds\,R\int_{t-\tau(t)}^t z_s(x,s)\,ds,\\
g_{1,2} &= \int_{t-\tau_M}^{t-\tau(t)} z_s^T(x,s)\,ds\,G\int_{t-\tau(t)}^t z_s(x,s)\,ds,\\
\alpha_1 &= \tfrac{\tau_M-\tau(t)}{\tau_M},\quad \alpha_2 = \tfrac{\tau(t)}{\tau_M},
\end{aligned}$$

where the relation $\left[\begin{smallmatrix} R & G\\ G^T & R\end{smallmatrix}\right] \geq 0$ from (20) implies (3) from [29].

Following [9] to the right-hand side of $\dot{V}$ we add

$$\begin{aligned}
0 &= 2\int_0^l \big[z^T(x,t)P_2 + z_t^T(x,t)P_3\big]\big[-z_t(x,t)\\
&+\Delta_D z(x,t) - \beta z_x(x,t) + Az(x,t) + \phi(z(x,t),x,t)\big]\,dx\\
&+2\int_0^l \big[z^T(x,t)P_2 + z_t^T(x,t)P_3\big]\,B\sum_{j=1}^N b_j(x)u_j(t)\,dx.
\end{aligned} \tag{A.2}$$

Integration by parts yields

$$2\int_0^l z^T(x,t)P_2\Delta_D z(x,t)dx = -2b\sum_{i=1}^n p_2^i d_i(0)\gamma_i(z^i(0,t))^2 - 2\sum_{i=1}^n \int_0^l p_2^i d_i(x)(z_x^i(x,t))^2 dx, \quad (A.3)$$

$$2\int_0^l z_t^T(x,t)P_3\,\Delta_D z(x,t)\,dx = -\dot{V}_B(t) - \dot{V}_2(t), \quad (A.4)$$

$$-\int_0^l z^T(x,t)P_2\beta z_x(x,t)\,dx = -z^T(x,t)P_2\beta z(x,t)\Big|_0^l + \int_0^l z_x^T(x,t)P_2\beta z(x,t)\,dx.$$

Therefore, for (3), (5) we will use the relation

$$-2\int_0^l z^T(x,t)P_2\beta z_x(x,t)\,dx = z^T(0,t)P_2\beta z(0,t). \quad (A.5)$$

The control inputs in (A.2) for $t \in [t_k, t_{k+1})$ can be presented in the form

$$u_j(t) = -K\left[v_{j,k} + e_{j,k} + C\sigma_k(x) + Cz(x,t-\tau(t))\right]. \quad (A.6)$$

From (17) we have

$$0 \le \sum_{i=1}^m \lambda_q^i\left((\delta_q^i\hat{y}_{j,k}^i)^2 - (v_{j,k}^i)^2\right) = \begin{bmatrix}\hat{y}_{j,k}\\ v_{j,k}\end{bmatrix}^T \begin{bmatrix}\Lambda_q\Delta_q^2 & 0\\ 0 & -\Lambda_q\end{bmatrix}\begin{bmatrix}\hat{y}_{j,k}\\ v_{j,k}\end{bmatrix}.$$

Substituting

$$\hat{y}_{j,k} = e_{j,k} + C\sigma_k(x) + Cz(x,t-\tau(t)),$$

for $x \in [x_{j-1}, x_j)$, $t \in [t_k, t_{k+1})$ we obtain

$$0 \le \nu(x,t)^T \begin{bmatrix}\Phi & 0\\ 0 & -\Lambda_q\end{bmatrix}\nu(x,t)$$

with $\Phi = \mathbf{1}_3 \otimes \Lambda_q\Delta_q^2$ and

$$\nu(x,t) = \mathrm{col}\left\{Cz(x,t-\tau(t)), C\sigma_k(x), e_{j,k}, v_{j,k}\right\}.$$

The latter implies

$$0 \le \sum_{j=1}^N \int_{x_{j-1}}^{x_j} \nu^T(x,t)\begin{bmatrix}\Phi & 0\\ 0 & -\Lambda_q\end{bmatrix}\nu(x,t)\,dx. \quad (A.7)$$

Relation (18) implies

$$0 \le \sum_{j=1}^N \int_{x_{j-1}}^{x_j} \Big\{\varepsilon[z(x,t-\tau(t)) + \sigma_k(x)]^T C^T\Omega C \times [z(x,t-\tau(t)) + \sigma_k(x)] - e_{j,k}^T(t)\Omega e_{j,k}(t)\Big\}\,dx. \quad (A.8)$$

From (2) we have

$$0 \le \lambda_\phi \sum_{j=1}^N \int_{x_{j-1}}^{x_j} \left[z^T(x,t)Qz(x,t) - \phi^T(z,x,t)\phi(z,x,t)\right]dx. \quad (A.9)$$

Denote $\sigma_k(x) = (\sigma_k^1(x), \ldots, \sigma_k^n)^T$. Then from Wirtinger's inequality [20] we have

$$-\frac{\pi^2}{\Delta^2}\int_{x_{j-1}}^{x_j}(\sigma_k^i(x))^2\,dx = -\frac{\pi^2}{\Delta^2}\int_{x_{j-1}}^{\bar{x}_j}\left[z^i(\bar{x}_j, t-\tau(t)) - z^i(x,t-\tau(t))\right]^2 dx - \frac{\pi^2}{\Delta^2}\int_{\bar{x}_j}^{x_j}\left[z^i(\bar{x}_j, t-\tau(t)) - z^i(x,t-\tau(t))\right]^2 dx \ge -\int_{x_{j-1}}^{x_j}\left[z_x^i(x,t-\tau(t))\right]^2 dx.$$

Therefore,

$$\begin{aligned}
&-\delta_1 \sup_{\theta\in[-\tau_M,0]} V(t+\theta) \le -\delta_1 V(t-\tau(t)) \le\\
&-\delta_1\sum_{j=1}^N\int_{x_{j-1}}^{x_j} z^T(x,t-\tau(t))P_1 z(x,t-\tau(t))\,dx\\
&-\delta_1\sum_{j=1}^N\int_{x_{j-1}}^{x_j}\sum_{i=1}^n p_3^i d_i^0[z_x^i(x,t-\tau(t))]^2\,dx \le\\
&-\delta_1\sum_{j=1}^N\int_{x_{j-1}}^{x_j} z^T(x,t-\tau(t))P_1 z(x,t-\tau(t))\,dx\\
&-\delta_1\sum_{j=1}^N\int_{x_{j-1}}^{x_j}\sum_{i=1}^n \frac{d_i^0 p_3^i\pi^2}{\Delta^2}(\sigma_k^i(x))^2\,dx.
\end{aligned} \quad (A.10)$$

Condition $\Xi \le 0$ implies that $\Xi_{33} \le 0$, therefore, $\delta P_3 - 2P_2 \le 0$ and

$$\sum_{i=1}^n\int_0^l\left[(\delta p_3^i - 2p_2^i)d_i(x)(z_x^i(x,t))^2\right]dx \le \int_0^l z_x^T(x,t)D_0(\delta P_3 - 2P_2)z_x(x,t)\,dx. \quad (A.11)$$

Finally, by adding the right-hand sides of (A.2), (A.7), (A.8), (A.9) to $\dot{V}$ in view of (A.1), (A.3), (A.4), (A.6), (A.10), (A.11) and using (A.5) for the boundary conditions (3), (5) we obtain

$$\dot{V} + \delta V - \delta_1 \sup_{\theta\in[-\tau_M,0]} V(t+\theta) \le \sum_{j=1}^N\int_{x_{j-1}}^{x_j}\xi_j^T(x,t)\Xi\xi_j(x,t)\,dx + W_B,$$

where

$$W_B = bz^T(0,t)\left[(\delta P_3 - 2P_2)D_0\Gamma + P_2\beta\right]z(0,t), \quad (A.12)$$

$$\xi_j(x,t) = \mathrm{col}\{z(x,t), z_t(x,t), z_x(x,t), z(x,t-\tau_M), \\ z(x,t-\tau(t)), \phi(z(x,t),x,t), \sigma_k(x), v_{j,k}, e_{j,k}\}.$$

Note that for (3) and (5) relation (A.5) allows to obtain $\Xi_{13} = 0$. For (4) relation (A.5) is not used, therefore, $\Xi_{13} = -P_2\beta$. Theorem's conditions imply $\dot{V} \leq -\delta V + \delta_1 \sup_{\theta\in[-\tau_M,0]} V(t+\theta)$. Assertion of Theorem follows from Lemma 1.

B Proof of Theorem 2

Consider Lyapunov-Krasovskii functional (16), where $\delta = \alpha$. Derivatives $\dot{V}_1$, $\dot{V}_2$, $\dot{V}_S$, V_R, and $\dot{V}_B$ are given in the proof of Theorem 1. Since for $x \in [x_{j-1}, x_j)$, $t \in [t_{j,k}, t_{j,k+1})$

$$\hat{y}_{j,k} = e_{j,k} + C\vartheta_j(t) + C\kappa(x,t) + Cz(x,t),$$

relation (17) implies

$$0 \leq \sum_{j=1}^{N} \int_{x_{j-1}}^{x_j} \nu^T(x,t) \left[\begin{smallmatrix} \Phi & 0 \\ 0 & -\Lambda_q \end{smallmatrix}\right] \nu(x,t)\, dx, \tag{B.1}$$

where $\Phi = \mathbf{1}_4 \otimes \Lambda_q \Delta_q^2$ and for $x \in [x_{j-1}, x_j)$, $t \in [t_{j,k}, t_{j,k+1})$

$$\nu(x,t) = \mathrm{col}\left\{Cz(x,t), e_{j,k}, C\vartheta_j(t), C\kappa(x,t), v_{j,k}\right\}.$$

Triggering condition (8) together with (9) imply

$$0 \leq \sum_{j=1}^{N} \int_{x_{j-1}}^{x_j} \big\{\varepsilon[z(x,t) + \vartheta_j(t) + \kappa(x,t)]^T C^T \Omega C \times \\ [z(x,t) + \vartheta_j(t) + \kappa(x,t)] - e_{j,k}^T(t)\Omega e_{j,k}(t)\big\}\, dx. \tag{B.2}$$

Therefore, by adding the right-hand sides of (A.2), (A.9), (25), (26), (B.1), (B.2) to $\dot{V}$ in view of (A.3), (A.4), (A.11), using (A.5) for the boundary conditions (3), (5), and using (A.1) with 0, l, $\tau(t)$ replaced by x_{j-1}, x_j, $\tau_j(t)$, respectively, we obtain

$$\dot{V} + \alpha V \leq \sum_{j=1}^{N} \int_{x_{j-1}}^{x_j} \psi_j^T(x,t)\Psi\psi_j(x,t)\, dx + W_B,$$

where W_B is given in (A.12),

$$\psi_j(x,t) = \mathrm{col}\{z(x,t), z_t(x,t), z_x(x,t), z(x,t-\tau_M), \\ z(x,t-\tau_j(t)), \phi(z(x,t),x,t), \vartheta_j(t), \kappa(x,t), v_j(t), e_j(t)\}. \tag{B.3}$$

Theorem's conditions imply $\dot{V} \leq -\alpha V$. Assertion of Theorem follows from the comparison principal [23].